Product guide

Solutions for air humidification and evaporative cooling

Product guide

Control Solutions and Humidification Systems for HVAC/R


Know HOW
CAREL

All our expertise at your disposal

Over 40 years' experience in the development of air humidification technologies are the basis for customer satisfaction and the success of our products.

Expertise that CAREL makes available to students, designers, installers and end users through a series of online tools.

Configurator

CPQ (Configure Price Quote) is the new online tool for configuring humidification systems.
CPQ allows users, in just a few simple steps, to enter the ambient and AHU design data and obtain the air transformations on the psychrometric chart and the humidification load, as well as a complete selection of humidifiers, probes, water treatment systems and various accessories.
For information on how to open a CPQ account, please contact your local CAREL subsidiary.

White papers

CAREL offers a series of publications detailing its knowledge of air humidity control in certain specific applications, such as hospitals, museums, paint spray booths and the printing industry.

These white papers, and many others, are available on our website www.carel.com

E-books

Two works published by CAREL, reference points in the scientific literature on humidification, are also available in ebook format.
These are practical and complete guides, set out as independent chapters, which represent a valuable tool for detailed analysis, especially for designers and specialists in the sector.

"Air humidification. Technical, health and energy aspects"

"Evaporative cooling"

Available on our website www.carel.com

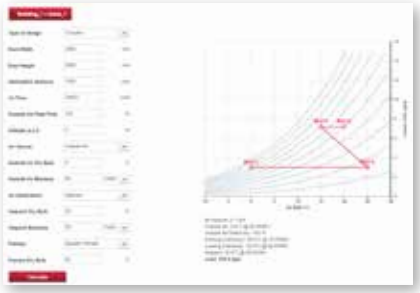

Isothermal humidification

+800B03001 - REV 03

Immersed electrode humidifiers

The operation of immersed electrode humidifiers is based on a very simple physical principle. As common drinking water contains a certain quantity of dissolved mineral salts, and is consequently slightly conductive, applying a voltage to metal electrodes immersed in the water creates an electric current that heats the water until boiling, thus producing steam (Joule effect).

The quantity of steam produced is proportional to the electric current, which is in turn proportional to the water level. This electric current is measured by a current transformer: by varying the level of water using a drain solenoid valve and due to the evaporation process, the current, and consequently steam production, can be modulated.

As the steam produced does not carry mineral salts, the salt concentration in the water and therefore the conductivity increases, and has to be periodically diluted by draining part of it using the drain pump and replacing it with new feedwater.

In addition, scale builds up over time and covers part of the cylinder, which must be replaced or cleaned. Compared to electric heater or gas-fired humidifiers, immersed electrode humidifiers:

- are less expensive to purchase;
- operate with drinking water;
- require periodical replacement (or cleaning) of the cylinder;
- feature modulation suitable for comfort or industrial applications, without extreme requirements.

CAREL has been manufacturing immersed electrode humidifiers since the 1970s and can draw benefit from its know-how in the field of electronic controllers: precise control, reliable electronics and sophisticated and complete control software.

The CAREL solutions for immersed electrode humidifiers are humiSteam and compactSteam.

humiSteam

UE*

humiSteam is a versatile solution, suitable for many applications, from civil to industrial environments, and even steam baths. It is designed for installation in rooms, using the steam blower, and for installation in air ducts, using high-efficiency linear steam distributors. humiSteam works on mains water, and its control software automatically adjusts operation according to the characteristics of the water, so as to optimise operating life without maintenance.
The main benefits of humiSteam are:

- patented AFS system (Anti Foaming System) that detects and manages foam to prevent droplets of water being carried by the steam;
- cylinders with plug-in power connectors for easy, quick and risk-free maintenance;
- quick start-up and a wide range of feedwater conductivity, for higher performance;
- built-in conductivity sensor and control software to optimise energy efficiency and operating life, with constant performance over the life of the cylinder;
- modulating limit probe for maximum safety in AHUs/ducts.

"Basic" (UE*Y)

This is the simplest solution for all steam humidification applications. Available in sizes from 1 to 65 kg/h, it comes with a basic electronic controller (Y) and display, with the following features:

- ON/OFF or proportional control (voltage or current) based on external signal;
- flow-rate modulation: 20 - 100%;
- adjustable maximum capacity;
- cylinder lifetime hour counter;
- automatic draining due to inactivity, so as to guarantee hygiene;
- complete diagnostics with memory;
- signal types: 0-10 V; 0-20 mA; 4-20 mA, NTC, 0-10 V; 2-10 V.

"Xplus" (UE*X)

Superior immersed electrode humidifier solution. It is equipped with a built-in type "X" controller, based on pCO technology, and LCD display and keypad for programming and control. Available in sizes from 1.5 up to 130 kg/h, it can control steam production in the following modes:

- ON/OFF control;
- proportional (voltage or current) to an external signal, plus safety limit probe in the duct;
- modulating based on the set point, humidity probe reading and duct limit probe reading;
- modulating based on the set point and external temperature probe reading (e.g. steam baths);
- continuous modulation of steam flow-rate from 20 to 100% of maximum output (10% - 100% in the 90 and 130 kg/h models);
- scheduled daily and weekly operation;
- alarm log management.

"Wellness" (UE*W)

This is the steam humidification solution explicitly designed for steam baths. Using the same technology as the "Xplus" version, humiSteam Wellness also allows integrated management of the other typical features of this application, such as:

- scheduled daily and weekly operation;
- different temperature set points for different time bands;
- up to 3 actuators for the distribution of essences, and 1 for the "sanitation" cycle;
- up to 2 fans (inside and outside) and a contact for the inside light.

In addition, the display-keypad unit can be detached from the humidifier and connected remotely, so as to facilitate integration into OEM products.

humiSteam table

Features	UE001*	UE003*	UE005*	UE008	UE009*	UE010*	UE015*	UE018*	UE025*	UE035*	UE045*	UE065*	UE090*	UE130*
General														
Rated steam production - kg/h	1.5	3	5	8	9	10	15	18	25	35	45	65	90	130
Power consumption - kW	1.12	2.25	3.75	6.00	6.75	7.50	11.25	13.5	18.75	26.25	33.75	48.75	67.5	97.5
Power supply for "Basic" and "Xplus" models" (**)														
• 200, 208-230 Vac -15/10%, 50/60 Hz single-phase	●	●	●		●									
• 200, 208, 230 Vac -15/10%, 50/60 Hz three-phase		●	●	●		●	●		●	●	●			
• 400, 460, 575 Vac -15/10%, 50/60 Hz, three-phase		●	●	●		●	●	●	●	●	●	●	●	●
Power supply for "Wellness" models"														
• 230 Vac 50/60 Hz single-phase	●	●	●		●									
• 230 Vac 50/60 Hz three-phase		●	●	●		●	●		●					
• 400 Vac 50/60 Hz three-phase		●	●	●		●	●	●	●	●	●	●		
Steam connection - mm	Ø 22/30		Ø 30						Ø 40			Ø 2x40		Ø 4x40
Outlet pressure limits - Pa	-600 to 1500		-600 to 1300		-600 to 1350				-600 to 2000					
Number of cylinders	1													
Operating conditions	1T40 °C, 10 to 90% RH non-condensing													
Storage conditions	-10T70 °C, 5 to 95% RH non-condensing													
Degree of protection	IP20													
Certification	CE, ETL (UL998), TÜV and EAC (GOST)													
Precision	up to ±5%													
Water fill														
Connection	3/4"G male													
Temperature limits - °C	1T40													
Water pressure limits - MPa - bar	0.1 to 0.8 - 1 to 8													
Instant flow-rate - l/m	0.6	0.6	0.6	0.6	1.1	1.1	1.1	1.1	5.85	5.85	5.85	7	14	14
Total hardness - °fH (*)	10 to 40													
Conductivity limits - µS/cm (*)	75 to 1250													
Water drain														
Connection	Ø 40													
Temperature - °C	≤100													
Instant flow-rate - l/m	7 (50 Hz) - 9 (60 Hz)								17,5 (50 Hz); 22,5 (60 Hz)				35 (50 Hz); 45 (60 Hz)	
Blower														
Number	1											2		4
Type	VSDU0A*								VRDXL*					
Power supply - Vac	24								230					
Rated power - W	37								120					
Rated air flow-rate - m³/h	192								576					
Network														
Integrated network connections	UEX*, UEY* and UEW*: Modbus®, CAREL protocol													
Optional network connections	UEX*, UEY* and UEW*: Modbus, BacNET RS485, BacNET Ethernet, LON, KONNEX (for UEY* using a gateway)													
Controller	UEY* / UEX* / UEW*												UEX*	

● standard

Dimensions in mm (in) and weights in kg (lbs)

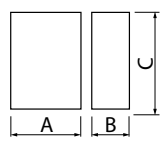

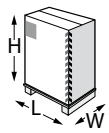

Model	AxBxC	weight	LxWxH	weight
UE001 to UE018	365x275x712 (14.37x10.83x28.03)	13.5 (29.76)	500x400x850 (19.68x15.75x33.46)	16 (35.27)
UE025 to UE045	545x375x815 (21.46x14.76.32.09)	34 (74.95)	665x465x875 (26.18x18.31x34.45)	39 (85.98
UE065	635x465x890 (25x18.31x35.04)	44 (97)	750x600x940 (29.53x23.62x37.01)	51 (112.43)
UE090 to UE130	1150x465x890 (45.27x18.31x35.04)	70 to 74 (154.32 to 163.14)	1270x600x940 (50x23.62x37.01)	77 to 81 (169.75 to 178.57)

Part number

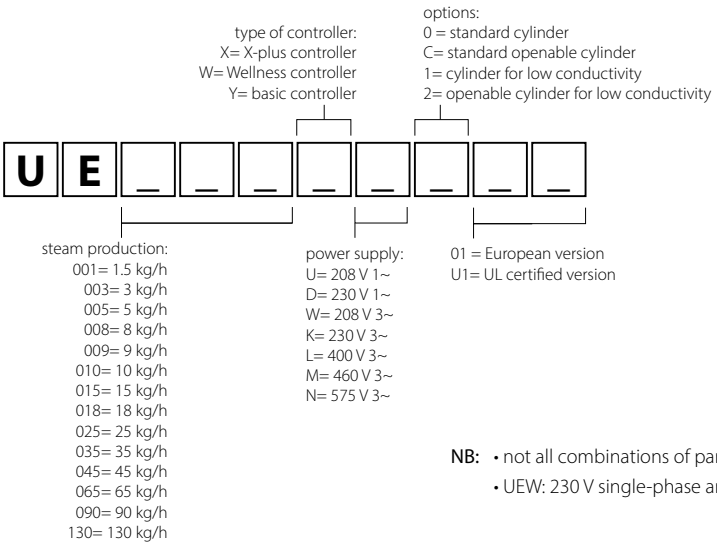

NB: • not all combinations of part numbers are available;
• UEW: 230 V single-phase and three-phase, 400 V three-phase.

OVERVIEW DRAWING humiSteam Y-X-W

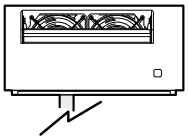

VSDU0A0003: steam blower, for room applications up to 18 Kg/h
VSDU0A0003: steam blower, for room applications up to 45 Kg/h

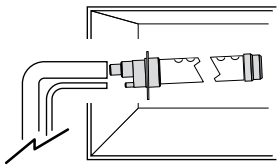

DP*: linear steam distributor (inlet Ø 22 mm, Ø 30 mm, Ø 40 mm), for duct applications

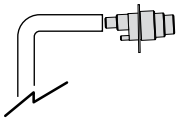

SDPOEM*: plastic nozzle up to 18 kg/h steam, for steam bath

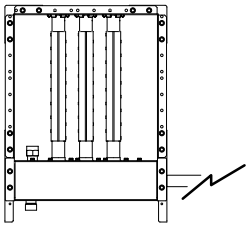

SA*: steam distributor for short absorption distances

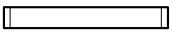

VSDREM0003: remote support for VSDU0A0003, for room applications

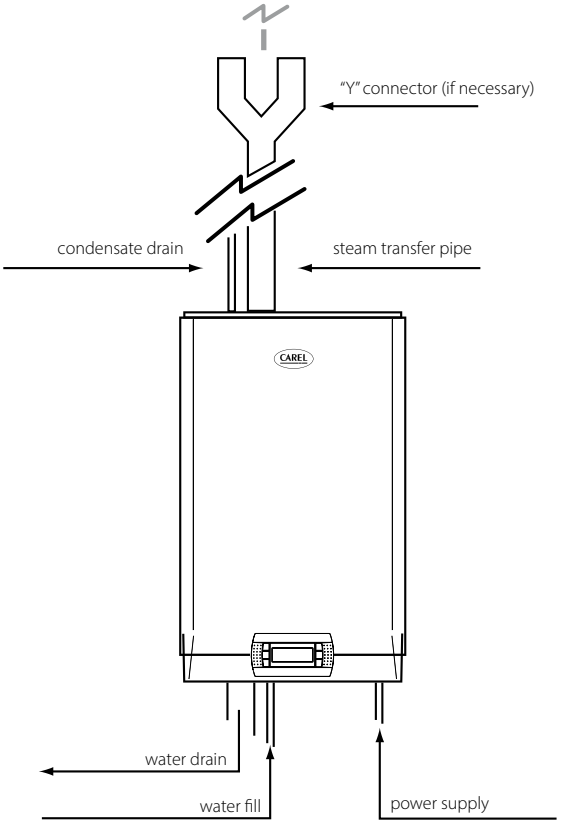

Probes

DPW*: temperature and humidity probe for civil environments

DPP*: temperature and humidity probe for industrial environments

ASET*: temperature and humidity probe for steam baths

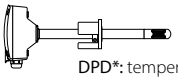

DPD*: temperature and humidity probe for ducts

NTC*: temperature probe for UEW

Cylinders

BL*

All CAREL immersed electrode humidifiers feature sophisticated control software that automatically adapts the operating parameters to the characteristics of the water; nonetheless, the optimum balance between cylinder life, variation in steam production and speed of response depending on the type of water and power supply can only be achieved by changing the shape and the position of the electrodes. For this reason, CAREL immersed electrode humidifiers today feature the widest choice of cylinders, with specific electrodes for water with conductivity between 75 µS/cm and 1250 µS/cm, for capacities between 1 and 65 kg/h, and for power supply voltages between 208 V and 575 V.
All humiSteam cylinders feature galvanised electrodes and are fitted with filters to avoid formation of lime scale at the bottom, consequently preventing blockage of the drain.

Openable cylinders

The new humidifiers can be fitted with "disposable" cylinders made from non-flammable polypropylene, class HB according to UL94, or alternatively openable and therefore cleanable cylinders, made from class V0 plastic (UL94 standard).
The openable cylinders feature quick click-on closing, with a rubber gasket to ensure perfect water-tightness between the two parts of the cylinder.

Cylinders: quick snap-on connection

The snap-on connectors (click onto the specially shaped terminal on the electrodes) ensure:
- higher reliability, avoiding the risk of overheating due to incorrect tightening of the nuts when replacing the cylinder,
- quicker cylinder replacement times, as the connections can be made in just a few seconds, with no tools required.

For backward compatibility with units already installed in the field, two adapter kits are available, comprising snap-on connector, protective gasket and fastening screw:
- 98C615P004 quick connector adapter for eyelet lugs, 5 mm pin (BL0*1* and BL0*R*);
- 98C615P005 quick connector adapter for eyelet lugs, 6 mm pin (BL0*2*, BL0*3*, BL0*4*).

A

B

Openable cylinder selection tables

humiSteam: three-phase 400 V (from 380 a 415 V)

	water conductivity		
	low	medium	high
Capacity kg/h	**75/350 µS/cm**	**350/750 µS/cm**	**750/1250 µS/cm**
3	BLCT1A00W2SP	BLCT1C00W2SP	BLCT1D00W2SP
5, 8	BLCT2B00W2SP	BLCT2C00W2SP	BLCT2D00W2SP
10, 15, 18	BLCT3B00W2SP	BLCT300W2SP	BLCT3D00W2SP
25, 35	BLCT4C00W2SP	BLCT4D00W2SP	
45, 90 (2x)	BLCT4B00W2SP	BLCT4C00W2SP	
65, 130 (2x)	BLCT5B00W0SP	BLCT5C00W0SP	

humiSteam: single-phase 230 V (from 220 a 240 V)

	water conductivity		
	low	medium	high
Capacity kg/h	**75/350 µS/cm**	**350/750 µS/cm**	**750/1250 µS/cm**
1, 3	BLCS1E00W2SP	BLCS1F00W2SP	
5	BLCS2E00W2SP	BLCS2F00W2SP	
9	BLCS3E00W2SP	BLCS3F00W2SP	

Disposable cylinder selection tables

humiSteam: single-phase 230 Vac (220 to 240 V)

	water conductivity		
	low	medium	high
Capacity kg/h	**75/350 µS/cm**	**350/750 µS/cm**	**750/1250 µS/cm**
1, 3 reduced	BL0SRE00H2SP	BL0SRF00H2SP	
1, 3	BL0S1E00H2SP	BL0S1F00H2SP	
5	BL0S2E00H2SP	BL0S2E00H2SP	
9	BL0S3E00H2SP	BL0S3F00H2SP	

humiSteam: three-phase 400 Vac (380 to 415 V)

	water conductivity		
	low	medium	high
Capacity kg/h	**75/350 µS/cm**	**350/750 µS/cm**	**750/1250 µS/cm**
3	BL0T1A00H2SP	BL0T1C00H2SP	BL0T1D00H2SP
5, 8	BL0T2B00H2SP	BL0T2C00H2SP	BL0T2D00H2SP
10, 15, 18	BL0T3B00H2SP	BL0T3C00H2SP	BL0T3D00H2SP
25, 35	BL0T4C00H2SP	BL0T4D00H2SP (*)	
45, 90 (2x)	BL0T4B00H2SP	BL0T4C00H2SP (*)	
65, 130 (2x)	BL0T5B00H0SP	BL0T5C00H0SP	

humiSteam: single-phase 208 Vac

	water conductivity		
	low	medium	high
Capacity kg/h	**75/350 µS/cm**	**350/750 µS/cm**	**750/1250 µS/cm**
1, 3 reduced	BL0SRE00H2SP	BL0SRF00H2SP	
1, 3	BL0S1E00H2SP	BL0S1F00H2SP	
5	BL0S2E00H2SP	BL0S2E00H2SP	
9	BL0S3E00H2SP	BL0S3F00H2SP	

humiSteam: three-phase 208 and 230 V

	water conductivity		
	low	medium	high
Capacity kg/h	**75/350 µS/cm**	**350/750 µS/cm**	**750/1250 µS/cm**
3	BL0T1A00H2SP	BL0T1B00H2SP	
5, 8	BL0T2A00H2SP	BL0T2A00H2SP	
10, 15	BL0T3A00H2SP	BL0T3A00H2SP	
25	BL0T4B00H2SP	BL0T4C00H2SP (*)	
35	BL0T4B00H2SP (*)		
45	BL0T5A00H0SP	BL0T5A00H0SP (BL0TSB00H0SP and 230 V)	

humiSteam: three-phase 460 V

	water conductivity		
	low	medium	high
Capacity kg/h	**75/350 µS/cm**	**350/750 µS/cm**	**750/1250 µS/cm**
3	BL0T1B00H2SP	BL0T1D00H2SP	
5, 8	BL0T2C00H2SP	BL0T2D00H2SP	
10, 15, 18	BL0T3C00H2SP	BL0T3D00H2SP	
25	BL0T4D00H2SP (*)		
35, 45, 90, (2x)	BL0T4C00H2SP	BL0T4D00H2SP (*)	
65, 130 (2x)	BL0T5C00H0SP	BL0T5D00H0SP	

humiSteam: three-phase 575 V

	water conductivity		
	low	medium	high
Capacity kg/h	**75/350 µS/cm**	**350/750 µS/cm**	**750/1250 µS/cm**
5, 8	BL0T2C00H2SP	BL0T2D00H2SP	
10, 15, 18	BL0T3C00H2SP	BL0T3D00H2SP	
25, 35, 45, 90 (2x)	BL0T4D00H2SP (*)		
65, 130 (2x)	BL0T5D00H0SP		

(*) for models UE 25, 35, 45 kg/h manufactured until October 2003 or with serial number less than 501,000, use the Y connector.
(**) as well as the voltages shown here, openable cylinders are available for the following voltages: 208 V single-phase, 230 V three-phase, 460 V three-phase, 575 V three-phase.
Important: on models UEH and UEP fitted with cylinders featuring an electrical bridge between two or more electrodes, the new snap-on data connectors cannot be used, as it is not possible to connect more than one cable to the same pin. On these units the spare cylinders retain the threaded pins and the same part numbers must be purchased. The following models of cylinder are affected: BL0S2F00H0, BLCS2F00W0, BL0S2E00H0, BLCS2E00W0, BL0T2B00H0, BLCT2B00W0, BL0T2A00H1, BLCT2A00W1, BL0T3B00H0, BLCT3B00W0, BL0T3A00H1 and BLCT3A00W1.

compactSteam

CH*

compactSteam is the CAREL proposal for the humidification of prestigious residential environments, professional offices or small and medium retail premises.
compactSteam is an immersed electrode humidifier, with following main features:

- elegant and discrete design, ideal for installation in any environment;
- built-in steam distributor, with adjustable louvers and very silent operation;
- large graphic LCD for straightforward understanding;
- market-leading functionality, safety and user friendliness;
- models from 1.6 to 4.5 kg/h;
- electrical and water connections can be completely concealed from view, and drain water temperature never exceeds 60 °C. In addition, if no humidification is required for more than 3 consecutive days, the water is automatically drained for maximum hygiene.

A version without built-in distributor is also available, for steam distribution in the duct, as well as a remote blower, which allows steam to distributed in a different room from where the humidifier is installed.

Other features

- maximum capacity selectable in steps of 5%;
- 0 to 10 V proportional control and modulation from 20 to 100%;
- automatic management of water concentration and foam;
- remote enabling signal input and alarm relay;
- cylinder operating hour counter, resettable.

Control

The microprocessor controller automatically manages all the functions of the unit, and includes a self-diagnostic system with simple and straightforward indications, both numeric and using icons, on the large LCD.
The controller includes an ON/OFF and proportional 0 to 10 V input, a remote enabling input, an alarm relay, an input for a flow sensor and a 24 V power supply output. Steam production is modulated continuously from 20% to maximum capacity, and water level is controlled by a solenoid fill valve and a drain pump.
compactSteam is available with or without steam blower, with capacities from 1.6 to 4.5 kg/h.

Built-in steam blower

VRDCHA1000 - 100 V
VRDCHA2000 - 230 V

The remote blower fan switches on when the humidifier receives a steam request. When humidification is no longer necessary, the fan stops. The blower is designed to distribute the steam outward and slightly downward, so as to prevent condensation from forming on the ceiling. Behind the grill is a cleanable filter that protects the internal components of the appliance against dust and debris.
The steam blower can be wall-mounted and deliver steam horizontally to the floor.

Dimensions in mm (in) and weights in kg (lb)

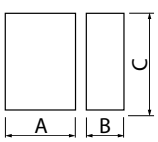

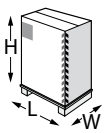

Model	AxBxC	weight	LxWxH	weight
CH*01*	341x204x600 (13.42x8.03x23.62)	8 (17.64)	520x380x740 (20.47x14.96x29.13)	10 (22.05)
CH*04*	341x204x600 (13.42x8.03x23.62)	8 (17.64)	520x380x740 (20.47x14.96x29.13)	10 (22.05)

compactSteam table

Specifications	CH00*N*003 (duct)	CHF0*N*003 (room)
General		
Rated steam production (kg/h) (*) - for all markets	**CH*04N*003:** 4,5 kg/h (9.9 lbs/h): 230 Vac single-phase 50/60 Hz - electrical power 3.4 kW **CH*04N*003:** 3,3 kg/h (7.3 lbs/h): 230 Vac single-phase 50/60 Hz - electrical power 2.5 kW **CH*01N2003:** 1.6 kg/h (3.5 lbs/h): 230 Vac single-phase 50/60 Hz - electrical power 1.2 kW	
- American market only	**CH004N0003:** 2,1kg/h (4.7 lbs/h): 110 Vac single-phase 50/60Hz - electrical power 1.6 kW **CH004N0003:** 1,6kg/h (3.5 lbs/h): 110 Vac single-phase 50/60Hz - electrical power 1.2 kW	
Power supply voltage (*)	230 V, 50/60 Hz single phase; 110-230V, 50/60Hz single phase	
Steam connection (mm)	22 mm	-
Max steam pressure (Pa/mmWC) (PSI/inWC)	950 Pa/95 mm WC; 0.14 PSI / 3.7 in WC	-
Current (A) (*)	**CH*04:** 14.8 A; **CH*01:** 5.2 A	
Operating conditions	1 to 40 °C (33.8 to 104°F) 10 to 60 % RH	
Storage conditions	-10 to 70 °C (14 to 158°F)	
Ingress protection	IP20	
Control type	ON/OFF and proportional 0-10 V (20-100% capacity)	
Fan flow-rate (m3/h)	-	92 m3/hour - 54 cfm 50 dB
Water fill		
Feedwater specifications	3/4" G	
Instant flow rate (l/min)	0.6 l/min 0.16 gpm	
Conductivity limits (µS/cm)	100-1250 µS/cm	
Water drain		
Water drain connection (mm)	32 mm (1.25")	
Maximum drain temperature	< 60°C (< 140°F)	
Discharge flow-rate (l/min)	max. 25 l/min (max. 6.6 gpm) @50Hz; max. 26.2 l/min (max. 7 gpm) @60Hz	

(*): peak values may differ from the rated values. For sizing information see the technical manual.

Part number

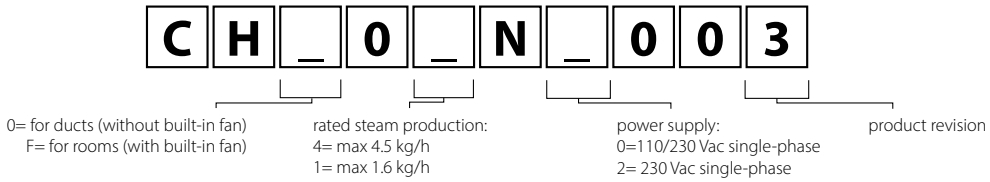

OVERVIEW DRAWING compactSteam

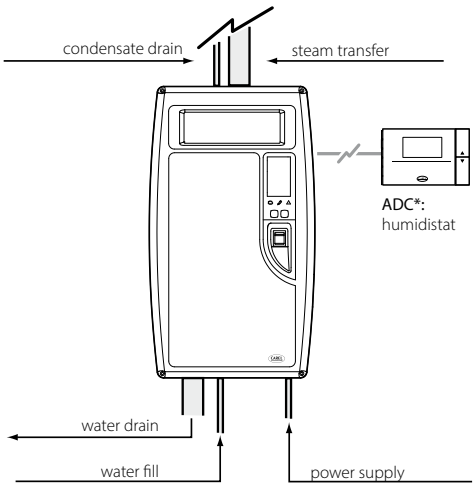

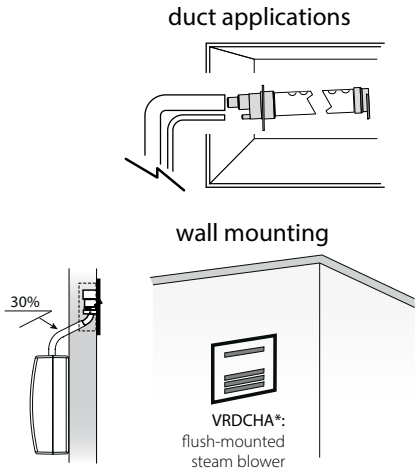

Heater humidifiers

Immersed heater humidification is the ideal solution when:

- use of steam production;
- exceptional relative humidity control performance (±1% r.H.);
- a functional solution that is independent of the feedwater characteristics;
- service continuity.

The features of steam humidification make this technique the preferred solution in applications where the priority is hygiene, such as research laboratories and the agriculture and food industries, as well as for preserving works of art: steam is in fact completely aseptic and does not carry solid particles, an intrinsic quality that is assured without needing to treat the feedwater.
There are various technologies used to generate steam. The most common and economical, ideal for less critical applications, uses immersed electrodes (humiSteam). This technology operates on drinking water, and not demineralised water, i.e. water that is able to conduct electricity; the minerals present in the water build-up and therefore periodical maintenance is needed, albeit not frequently. Furthermore, the control mode cannot guarantee sufficient precision for the most delicate applications. For such applications, which require both high precision and guaranteed continuity of service, CAREL has created the heaterSteam range of immersed heater humidifiers.

These work with completely immersed heaters made from corrosion-proof materials. The control system, PWM with solid state relays and therefore no wear, ensures accurate control across the entire range of modulation, from zero to maximum capacity. Moreover, the heater system, which heats the water by thermal contact and not electrical conduction, means demineralised water can be sued, therefore completely eliminating the need for periodical maintenance.
The heaterSteam range, CAREL's solution for electric heater humidification, features mechanical components and software functions that are unique on the market, as well as unprecedented levels of performance.

heaterSteam

UR*

The new range of CAREL heaterSteam heater humidifiers continues the evolution of steam humidification technologies. heaterSteam combines the most advanced humidity control technology with the potential of connectivity, offering a product that is unrivalled on the market in terms of precision, reliability and simple management.
The new developments have affected the product across the board, from the mechanical components to the electronics, with a new 4.3" touchscreen graphic interface and electronic controller based on c.pCO platform.
The new software functions make heaterSteam even more reliable and versatile, while the connectivity features allow seamless integration into higher-level BMS systems.

heaterSteam is available in two versions: process and titanium.

heaterSteam process has heaters made from Incoloy® 825, a highly-resistant material that allows operation in complex conditions, even when feedwater quality is not controlled.

heaterSteam titanium the world's only humidifier with titanium heaters. The reliability of titanium makes heaterSteam titanium the natural solution for applications where continuity of operation is crucial. In particular, it can operate with treated water of any quality, even extremely aggressive water with conductivity below 1 µS/cm, and softened water down to 0° fH: the titanium heaters are completely immune to corrosion.

heaterSteam titanium also features thermally insulated cylinders to ensure energy savings, and an internal Kevlar liner for fast and effective maintenance.

Both models share exclusive technological solutions, such as integrated excess temperature protection (unique on the market) and the patented Anti-Foaming System, guaranteeing reliability of the application. The modulating limit probe prevents the formation of condensation, without sudden interruptions to steam production.

User interface

The new heaterSteam range makes human interaction with the unit simple and intuitive.
heaterSteam models can be equipped with the new 4.3" touch graphic terminal, which, through a series of graphic pages with colourful and animated icons, allows quick and easy management of the unit, as well as giving the product an innovative and technological feel.
Furthermore, the titanium version is also available with built-in webserver, for configuration and monitoring of the humidifier from any PC or mobile device connected to the same local network.

Control

The heaterSteam c.pHC electronic controller has been designed and developed by CAREL to ensure simple set-up and commissioning and exceptional performance. Steam production can be controlled either based on relative humidity (H) or temperature (T), for applications such as steam baths. Except when operating in ON/OFF mode, production is modulated linearly from 0 to 100% of maximum flow-rate, giving a precision of ±1% RH even with a high number of air changes. The two versions of heaterSteam, despite being focused on different applications, share a number of important basic functions, such as:

- start-up wizard: simple and fast guided configuration of the main parameters when starting the unit the first time;
- patented AFS (Anti-Foaming System): automatic foam control to avoid droplets being released with the steam;
- modulating limit probe: to prevent condensate formation in the duct/AHU;
- thermal shock: periodical scale removal from the heating elements;
- connectivity: communication protocols available as standard on the units are Modbus®, BACnet™ and CAREL on the BMS serial port, and Modbus®, BACnet™ on the Ethernet port;
- preheating: keeps the water in the cylinder at a user-set temperature for immediate steam production when required;
- built-in USB port for saving logs and alarms, copying and pasting configuration parameters from one unit to another, and updating the software directly in the field;
- master/slave: up to 20 units can be controlled via a proportional signal, so as to extend system capacity up to 1600 kg/h.

The titanium version is further enhanced by a number of unique software functions:

- redundancy and rotation: guarantees service continuity even during maintenance, for maximum reliability;
- wireless sensors: installation, even retrofits, has never been so simple.

Cloud based monitorning

The unit can be monitored and interacted with via a remote connection to the DigitalHUM cloud portal. This plug&play solution provides remote management of the humidifier by connecting the unit to the "cloudgate" gateway, available in the Ethernet and 4G versions. The humidifier operating data are available at all times on the cloud, as support for maintenance and to manage and to verify and reduce operating costs.

Webserver

The built-in webserver allows a simple internet browser to configure and monitor the entire humidification system from a PC or tablet, connected to the local network.

Supervision

The default communication protocols on the units are Modbus, BACnet and Carel on the BMS and Modbus serial port, and BACnet on the Ethernet port.

heaterSteam table

Features	UR002*	UR004*	UR006*	UR010*	UR013*	UR020*	UR027*	UR040*	UR053*	UR060*	UR080*
General											
Rated steam production - kg/h	2	4	6	10	13	20	27	40	53	60	80
Power consumption - kW	1.6	3.3	4.7	7.4	10	15.1	20	30.5	40	45.7	60
Power supply (other voltages upon request) • 230 Vac -15/10%, 50/60 Hz single-phase • 400 Vac -15/10%, 50/60 Hz three-phase	●	●	● ●	●	●	●	●	●	●	●	●
Steam connection - mm	Ø 30					Ø 40			2x Ø 40		
Steam pressure - Pa	0 to 1500					0 to 2000					
Number of heaters	1	1	3	3	3	6	6	6	6	9	9
Operating conditions	1T40 °C, 10 to 60% RH non-condensing										
Storage conditions	-10T70 °C, 5 to 95% RH non-condensing										
Degree of protection	IP20										
Certifications	CE, ETL (UL998), TÜV and EAC (GOST)										
Water fill											
Connection - mm	3/4"G male										
Temperature limits - °C	1T40										
Water pressure limits - MPa; bar	0.1 to 0.8; 1 to 8										
Instant flow-rate - l/m	1.1	1.1	1.1	1.1	1.1	4	4	4	10	10	10
Total hardness - °fH (*)	5 to 40										
Conductivity limits - µS/cm (*)	0 to 1500										
Water drain											
Connection	Ø 40					Ø 50					
Temperature - °C	<100										
Instant flow-rate - l/m	7 (50Hz); 9 (60Hz)					17.5 (50 Hz); 22.5 (60 Hz)					
Blower											
Number	1								2		
Type	VSDU0A*					VRDXL*					
Power supply - Vac	24					230					
Rated power - W	37					120					
Rated air flow-rate - m^3/h	192					576					
Network											
Network connection	Modbus RTU and TCP/IP BACnet MS/TP and IP										
Control											
Continuous modulation (with SSR)	0 to 100%										
Integrated control (probes not included)	RH or temperature										
External proportional signal	●										
Limit probe supported	●										
Remote ON/OFF	●										
Alarm relay	●										
Type of signal (probe or external controller)	0 to 10 V; 0 to 1 V; 2 to 10 V; 0 to 20 mA; 4 to 20 mA										
Supervisor (via RS485 and Ethernet)	●										

(*) heaterSteam can be supplied with completely demineralised water (0 °fH). If supplied with softened water, the minimum hardness value indicated must be observed, and the instructions described in the manual must be followed.

● standard

Functions

Features	Process	Titanium
User interface	4.3" touchscreen or LCD with 6 buttons	4.3" touchscreen
Heaters with thermal protection	Incoloy® 825	Titanium
Thermal shock	●	●
Master/slave function	"Mirror" [1]	"Endurance" [2]
Redundancy and rotation		●
Wireless sensors		●
Webserver		●
BACnet™, Modbus® and CAREL protocols	●	●
USB port	●	●
Cloud-based monitoring service	● [3]	● [3]
Preheating	●	●
Thermally insulated cylinder		●
Kevlar scale removal sack		●
Start-up wizard	●	●
Evaporation cycles before drain to dilute	40	50 [5]
Precision	up to ±1%	

● standard
1 Using the "mirror" function, the heaterSteam process Master humidifier can extend its capacity by managing up to 19 slave units, which faithfully replicate the status of the Master unit
2 Using the "Endurance" function, heaterSteam titanium can manage a further 19 units via Ethernet. This feature includes redundancy, rotation and maintenance functions. The latter is a major innovation: imagine an installation with three UR units, each with a capacity of 80 kg/h, during maintenance on one of the units, the other two will compensate for the momentary absence by increasing their steam production.
3 The digitalHUM remote supervision service, included, allows the user to monitor and interact with the unit from wherever they are.
4 Up to UR013
5 heaterSteam titanium, exploiting the mechanical characteristics of the heaters, is the only humidifier on the market that can reach 50 consecutive evaporation cycles without requiring a drain to dilute cycle! (The market standard is 40 cycles).

Dimensions in mm (in) and weights in kg (lb)

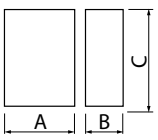

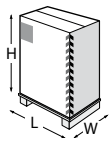

Model	AxBxC	weight	LxWxH	weight
UR002*, UR013*	365x275x712 (14.37x10.83x20.03)	26 (57.32)	510x410x870 (20x16x34.2)	31 (68.34)
UR020*, UR040*	690x445x888 (27.16x17.51x34.96)	63 (138.89)	820x570x1050 (32.2x22.4x41.3)	73 (160.94)
UR053*, UR080*	876x445x888 (34.48x17.51x34.96)	87 (191.80)	990x540x1050 (39x21.2x41.3)	98 (216.05)

Part number

model:
0= process
1= titanium

U	R	_	_	_	H	_	_	0	4

rated instant steam production:
002= 2 kg/h
004= 4 kg/h
006= 6 kg/h
010= 10 kg/h
013= 13 kg/h
020= 20 kg/h
027= 27 kg/h
040= 40 kg/h
053= 53 kg/h
060= 60 kg/h
080= 80 kg/h

power supply:
D= 230 Vac 1~
U= 208 Vac 1~
L= 400 Vac 3~
W= 208 Vac 3~
K= 230 Vac 3~
M= 460 Vac 3~
N= 575 Vac 3~

NB: not all the combinations of codes are available.

OVERVIEW DRAWING heaterSteam

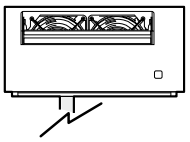

VSDU0A0003: steam blower, for room applications up to 18 Kg/h
VRDXL00001: steam blower, for room applications up to Kg/h

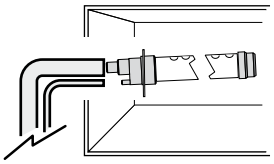

DP*: linear steam distributor (inlet Ø 22 mm, Ø 30 mm, Ø 40 mm), for duct applications

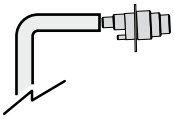

SDPOEM*: plastic nozzle up to 18 kg/h steam, for steam bath

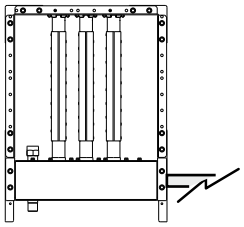

SA*: steam distributor for short absorption distances

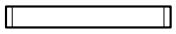

VSDREM0003: remote support for VSDU0A0003, for room applications

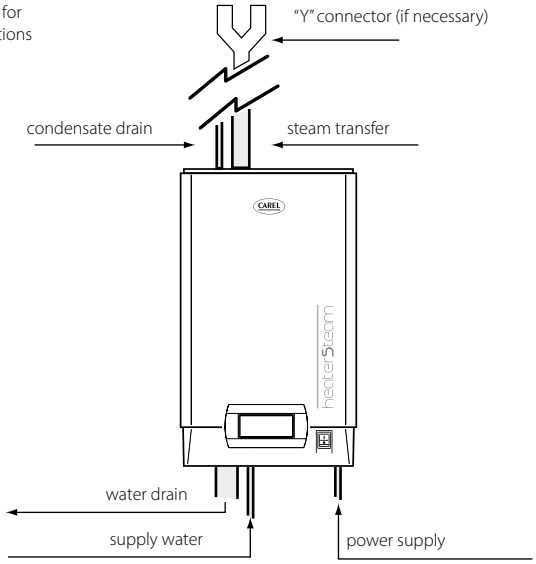

Probes

DPP*: temperature and humidity probe for industrial environments

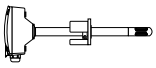

DPD*: temperature and humidity probe for ducts

DPW*: temperature and humidity probe for civil environments

SA*: room temperature and humidity sensor - wireless

WS01AB2M20: access point - wireless

Gas-fired humidifiers

CAREL's extensive experience in the humidification sector has been used to develop the gaSteam range of gas-fired humidifiers, exploiting an energy source that is more economical than electricity. The humidifiers have now been upgraded, becoming an even more professional and reliable solution, especially in cases where the feedwater is particularly aggressive. The range now comprises both indoor and outdoor models, and is available 45, 90, 150, 180, 300 and 450 (outdoor only) kg/h sizes. CAREL gas-fired humidifiers, by simply setting certain parameters, can run on different types of gas, without the need to replace any parts.

gaSteam in fact can be fuelled with natural gas or LPG. The gas used is selected directly in the pre-mix burner calibration software, without needing tools or making any mechanical modifications to the unit.

Cost effectiveness

To generate 1 kg of steam at atmospheric pressure, considering all the various factors, requires around 750 Wh of energy, either electrical or from other sources. One of the main factors when choosing solutions in the field of isothermal humidification is therefore energy cost, particularly for heavy-duty applications. Gas can be considered an ideal solution in terms of energy source, however to completely exploit its advantages, a system with high thermal efficiency is required, capable of minimising heat loss. The efficiency of our humidifiers is between 94 and 96%.

gaSteam is suitable for precision applications, thanks to continuous capacity modulation from 25% (12.5% for UG180 and UG300) to 100%. Precision up to +/-2% around the set point.

Outdoor version

To ensure complete operation in all weather conditions, gaSteam can be ordered in the outdoor version (-40T45 °C/-40T113 °F). The unit is fully assembled in the factory and can be equipped with frost protection heaters.
The outdoor version eliminates the risk of having a source of gas inside the building, and can also be used when no space is available indoors. The base is raised to avoid the stagnation of water and simplify handling by forklift.
In the event of inactivity or temperatures beyond the critical threshold, gaSteam features an automatic boiler drain function.

indoor

outdoor

gaSteam

UG*H* and UG*Y*

The family of gaSteam humidifiers features very high thermal efficiency, so as to fully exploit the cost savings of gas. The heat exchanger has been designed to increase performance even with particularly aggressive feedwater: stainless steel design for high performance.

gaSteam humidifiers are equipped with the latest c.pHC microprocessor electronic controller, based on the CAREL programmable c.pCO. The user interface features a 4.3" touchscreen graphic display, which improves the user experience through instant information and easy navigation, with graphic icons and texts in various languages. The CAREL pGDX display allows complete management of the humidifier's functions even by the less expert users, thanks to the colour graphic display and animated icons.

The default communication protocols on gaSteam units are: Modbus. BACnet and Carel on the BMS serial port; Modbus® and BACnet™ also on the Ethernet port. The controller can be connected to an active probe and an optional second modulating limit probe; operation is either ON/OFF or proportional to an external control signal. A complete set of diagnostics is also provided for maintenance.

Safety

gaSteam is fitted with various safety devices, including:

- pre-mix, room-sealed burner with forced ventilation;
- an air/gas control valve with double safety closing;
- temperature sensor in the flue gas outlet that checks for malfunctions, and provides early warning of excessive scale on the heat exchanger;
- a flame detector in the burner that closes the gas valve in the event of malfunctions;
- the patented AFS antifoam system with corresponding sensor;
- a multi-stage water level sensor;
- an automatic water conductivity control system to avoid corrosion.

Added advantages

- built-in USB port:
  - save the logs and alarms to USB flash drive;
  - copy and paste the configuration parameters;
  - update the software in the field;
- continuous modulation from 25 to 100% (12.5% for the 180 and 300 kg/h model);
- boiler and components in contact with the water in stainless steel;
- preheating function for a faster response, can also be used as a frost protection function;
- supply with mains water or demineralised water. The controller can be set for use with softened water, within the limits described in the reference tables;
- precision: up to ± 2% rH.;
- pre-assembled flue gas outlet and steam outlet connections;
- Commissioning wizard: simple and fast guided configuration of the main parameters when starting the unit the first time;
- built-in webserver: a simple internet browser can be used to configure and monitor the entire humidification system from a PC, tablet or smartphone, connected to the local network.
- digitalHUM: enabling the service via the Ethernet or 4G connection allows remote monitoring and interaction with the unit.

Frost protection function

The gaSteam range is equipped with various solutions to prevent the unit from falling below a certain temperature threshold. If the internal temperature falls too low, the burner is activated to heat the water and consequently the humidifier. If this action is not sufficient and the internal temperature continues to fall, the drain valve is activated to completely empty the water. In addition to these functions, on outdoor models there is also a normally-open valve connected to a temperature probe (independent), which completely drains the boiler if it measures a temperature below 3°C (37.4 F), default value. In addition, special heaters can also be installed inside the unit, which work independently (optional kit: UGKH1151KW for 115 Vac versions and UGKH2301KW for 230 Vac versions).

Easy maintenance

gaSteam can be used with mains water, which leads to scale build-up over time. The boiler has however been designed to allow scale to accumulate at the bottom, without affecting the heat exchanger and reducing routine maintenance for descaling. When necessary, the bottom of the boiler can

be easily opened for complete cleaning. The use of demineralised water reduces routine maintenance and prevents the unit from having to stop for periodical cleaning.

Certification

gaSteam is approved in accordance with European CE regulations, German TÜV regulations and the American ETL regulations. The outdoor versions also feature IAS 12-94 protection rating.
In Europe, the units have obtained specific DVGW certification for gas-fired appliances, and AGA certification for the Australian market.

In addition to all this, gaSteam is certified, thanks to its low NOx emissions, as a class 5 unit for the UG45*, UG90*, UG150*, and class 4 for UG180*, UG300* and UG450*: this allows installation even in countries where very strict standards are in force.

Specific components

Heat exchanger

The stainless steel heat exchanger is made up of a series of parallel plates (elements), welded horizontally, using a repetitive and thus controllable process. The shape has been designed to ensure a high heat exchange surface area, and consequently very high efficiency, in the order of 94-96%. The stainless steel heat exchanger also features high resistance to corrosion, guaranteeing a long operating life.

Burner head (90 kg/h model)

Including ignition and flame detection device.
The controller manages the production of steam by adjusting the burner fan speed. The gas inlet valve controls the flow of gas as a consequence. The flame sensor controls both the automatic ignition device and gas valve: with no flame the flow of gas is shut off.

Cloud-based monitoring

The unit can be monitored and interacted with via a remote connection to the DigitalHUM cloud portal. This plug&play solution provides remote management of the humidifier by connecting the unit to the "cloudgate" gateway, available in the Ethernet and 4G versions. The humidifier operating data are available at all times on the cloud, as support for maintenance and to manage and to verify and reduce operating costs.

Webserver

The built-in webserver allows a simple internet browser to configure and monitor the entire humidification system from a PC or tablet, connected to the local network.

Supervision

The default communication protocols on the units are Modbus, BACnet and Carel on the BMS and Modbus serial port, and BACnet on the Ethernet port.

gaSteam table

Features	UG045*	UG090*	UG150*	UG180*	UG300*	UG450*
General						
Rated steam production - kg/h	45 (100)	90 (200)	150 (330)	180 (400)	300 (660)	450 (990)
Modulation of steam production	25 to 100%	25 to 100%	25 to 100%	12,5 to 100%	12,5 to 100%	12,5 to 100%
Power supply	230 Vac 50 Hz (ver. UG***YD004)/ 115V 60 Hz (ver. UG***Y1104)					
Steam outlet pressure limits - Pa	0 to 2000 (0 to 0,30)					
Steam connection - Ø mm	1x80 (2x3.15)		1x80 (1x3,15)	2x80 (2x3.15)	2x80 (2x3,15)	3x80 (3x3,15)
Gas connection	1x1"G	1x1"G	1x1"G	1x1" 1/4G	1x1" 1/4G	1x1" 1/4G
Types of gas	natural gas, LPG					
Operating conditions	Indoor: 1T40°C (33T104 F); 10-90% rH. non cond. Outdoor: -40T45°C (-40T113F); 10-90% rH non cond					
Storage conditions	-10T70 °C, 5 to 95% r.H. non-condensing					
Degree of protection	Indoor: IP20 Outdoor: IAS 12-94					
Certification	CE, ETL (UL998), TÜV and AGA In addition for the outdoor version: ETL in accordance with IAS standard (No. 12-94) for outdoor installations.					
Water fill						
Connection	1x3/4"G male					2x3/4"G male
Temperature limits - °C	1T45°C(34T113°F);					
Water pressure limits - MPa/bar	0.1 to 0.8 - 1 to 8 (14.5 to 166)					
Fill valve instant flow rate - l/m (gallUS/min)	18 (4.76)					
Total hardness - °fH (*)	4 to 40					
Maximum conductivity limits - µS/cm (*)	1500					
Water drain						
Connection Ø - mm (in)	50 (1.97)					
Temperature - °C (°F)	<100 (212)					
Instant flow-rate - l/m (gallUS/min)	32 (8.45)					
Flue gas						
Air intake Ø - mm (in)	80 (3)	80 (3)	80 (3)	2x 80 (3)	2x 80 (3)	3x80 (3)
Flue Ø - mm (in)	80 (3)	80 (3)	80 (3)	2x 80 (3)	2x 80 (3)	3x80 (3)
Network						
Network connection	Modbus RTU & TCP/IP; BACnet MS/TP & IP					
Control						
Continuous modulation	25-100% (12,5-100% for units 180 and 300 kg/h)					
Built-in control (probes not included)	RH or temperature					
Proportional to external signal	●					
Limit probe supported	●					
Remote ON/OFF	●					
Alarm relay	●					
Signal type (probe or external controller)	0 to 10 V; 0 to 1 V; 2 to 10 V; 0 to 20 mA; 4 to 20 mA					
Supervisor (via RS485 and Ethernet)	●					

(*) gaSteam can run on completely demineralised water (0 °fH). If supplied with softened water, the minimum hardness value indicated must be observed, and the instructions described in the manual must be followed.

● standard

Functions

Features	All versions
User interface	4.3" touchscreen
Main/secondary functions	"Mirror"[1] , "Endurance"[2]
Redundancy and rotation	●
Wireless probes	●
Webserver	●
BACnet™, Modbus® and CAREL protocols	●
USB port	●
Cloud-based monitoring service	●[3]
Preheating	●
Advanced preheating	●[4]
Start-up Wizard	●
Evaporation cycles before drain to dilute	max. 40
High heat exchanger efficiency	up to 96%
Precision	up to ± 2%
Flame sensor	●
Drain tempering kit (optional)	●
Frost protection function	●

● standard

[1] Using the "mirror" function, the gaSteam main humidifier can extend its capacity by managing up to 19 slave units, which faithfully replicate the status of the main unit.

[2] Using the "Endurance" function, gaSteam can manage a further 19 units via Ethernet. This feature includes redundancy, rotation and maintenance functions. The latter is a major innovation: imagine an installation with three UG units, each with a capacity of 90 kg/h: during maintenance on one of the units, the other two will compensate for the momentary absence by increasing their steam production.

[3] The digitalHUM remote supervision service, included, allows the user to monitor and interact with the unit from wherever they are.

[4] In main/secondary systems with "grouped" rotation, if the "advanced preheating" function is active, when the request reaches 90% of production (on the units correctly in production), preheating is activated on the remaining units.

Dimensions in mm (in) and weights in kg (lb)

	indoor version				outdoor version			
	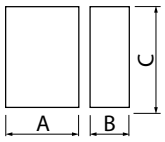		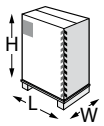		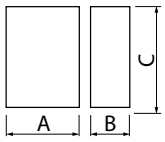		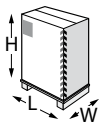	
Mod.	AxBxC	weight	LxWxH	weight	AxBxC	weight	LxWxH	weight
UG045*	1443x656x1603 (57x61x63)	255 (562)	1486x706x1470	255 (562)	1560x800x1603 (61x31x63)	270 (595)	1486x706x1470	270 (595)
UG090*	1443x656x1603 (57x26x63)	255 (562)	1486x706x1470	255 (562)	1560x800x1603 (61x31x63)	270 (595)	1486x706x1470	270 (595)
UG150*	1443x656x1603 (57x26x63)	255 (562)	1486x706x1470	255 (562)	1560x800x1603 (61x31x63)	270 (595)	1486x706x1470	270 (595)
UG180*	1443x993x1603 (57x39x63)	355 (783)	1486x1086x1470	355 (783)	1560x1107x1603 (61x44x63)	370 (816)	1486x1086x1470	370 (816)
UG300*	1443x993x1603 (57x39x63)	355 (783)	1486x1086x1470	355 (783)	1560x1107x1603 (61x44x63)	370 (816)	1486x1086x1470	370 (816)
UG450*	-	-	-	-	1620x1668x1603 (64x66x63)	550 (1213)	1486x1086x1470	550 (1213)

Part number

type of controller:
H= indoor installation 1T45°C (34T113°F)
Y= outdoor installation 1T45 °C(34T113 °F)
X= outdoor modulating -40T45 °C (-40T113 °F) UL

NB: not all the combinations of codes are available

U	G	_	_	_	H	D	_	0	5

rated instant steam production kg/h:
045= 45 kg/h (100 lbs/h)
090= 90 kg/h (200 lbs/h)
150= 150 kg/h (330 lbs/h)
180= 180 kg/h (400 lbs/h)
300= 300 kg/h (660 lbs/h)
450= 450 kg/h (990 lbs/h)

supply voltage:
D= 230 Vac 1ph
1= 115 V 1ph

Frequency:
0= 50 Hz
1= 60 Hz

OVERVIEW DRAWING gaSteam

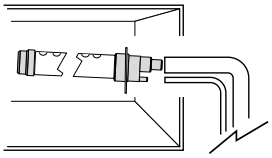

DP*0: linear steam distributor (inlet Ø 22 mm, Ø 30 mm, Ø 40), for duct applications
DP*H: high-efficiency linear steam distributor (inlet Ø 30 mm, Ø 40),reduces condensation by 20% compared to DP*0 linear distributors

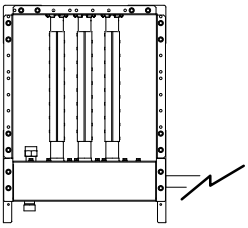

SA*: steam distributor for short absorption distances

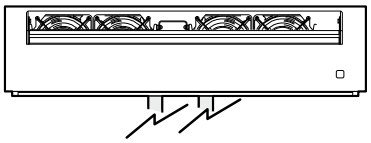

VRDXL00001: steam blower, for room applications up to 45 Kg/h

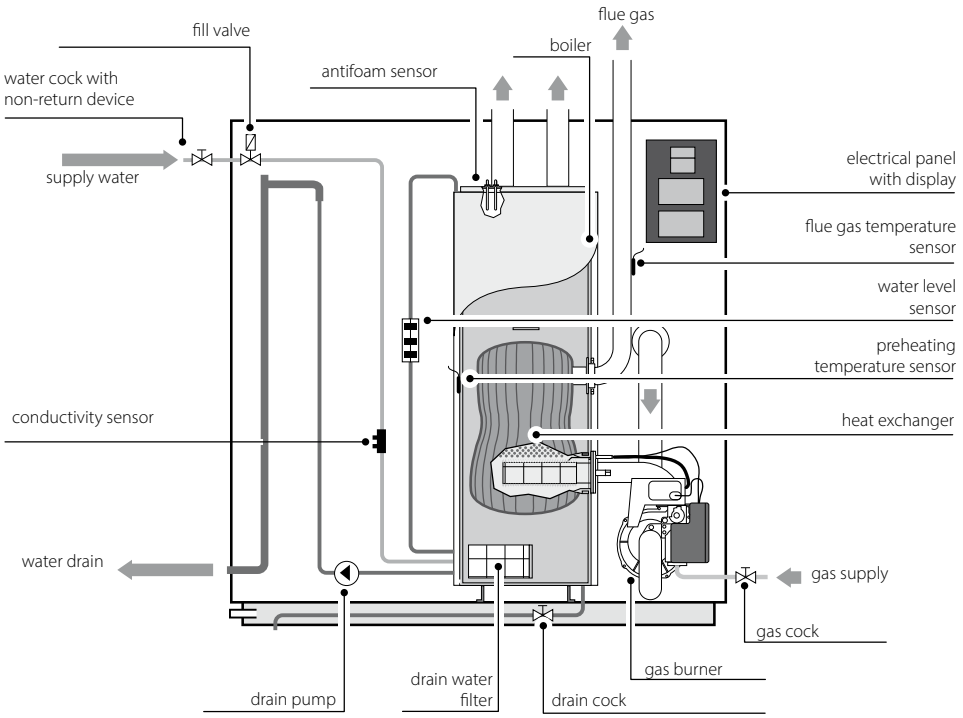

Probes

DPW*: temperature and humidity probe for civil environments

DPP*: temperature and humidity probe for industrial environments

ASET*: temperature and humidity probe for steam baths

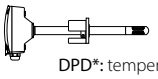

DPD*: temperature and humidity probe for ducts

Centralised steam distributors

ultimateSAM is an atmospheric or pressurised steam dispersion system, designed to uniformly and effectively distribute dry steam into ducts or air handling units. SAM stands for Short-Absorption Manifold, in other words a steam dispersion system with a short absorption or non-wetting distance (even less than 0.2 m).

It has been designed to be built "to measure" for the AHU/duct, guaranteeing low heat gain (max. 2 °C/4 °F) and very low condensate formation, thanks to the air cushion insulation on the pipes.

All metal parts fitted in the AHU/duct are made from AISI 304 steel so as to guarantee hygiene and long operating life.

Main features

SAB*/SAT*

- steam: 15 to 1110 kg/h (44 to 2440 lbs/h), 0 to 4 barg (0 to 58 PSIg), also suitable for steam at atmospheric pressure;
- dimensions WxH: 289x289 mm to 3031x3181 mm in 76, 102, 152, 304 mm steps (11.4" x 11.4" to 120" x 120" in steps of 3", 4", 6", 12");
- can be supplied with/without insulation, with/without support frame, unassembled or completely assembled.

SA0*

- SA0* single-pipe version also available; steam flow-rate 20 to 140 kg/h (44 to 309 lbs/h), 0 to 4 barg (0 to 58 PSIg), also suitable for steam at atmospheric pressure; dimensions from 503 mm to 2175 mm (from 19" to 86").

System composition

- AISI 304 steam distribution pipes with/without insulation. On insulated pipes, the nozzles are made from PPS (Ryton), which has a continuous operating temperature of 220 °C/428 °F;
- AISI 304 manifold that carries the steam to the distribution pipes. The manifold is placed at the bottom for steam flow-rates from 15 to 370 kg/h (SAB*); for steam flow-rates up to 1110 kg/h, the manifold is fitted at the top (SAT* top-feed models; these are nonetheless also suitable for steam flow-rates starting from 60 kg/h);
- silicone gaskets for high temperatures (min 150 °C/300 °F); EPDM when in contact with steam;
- AISI 304 support frame;
- model SA0*: insulated AISI 304 pipes with nozzles.

Benefits

- holes set out along the entire height of the pipes deliver steam uniformly, ensuring a very short non-wetting distance;
- energy saving due to insulation on the pipes, decreasing air heat gain and condensate formation;
- hygiene: ultimateSAM is made from AISI 304 steel;
- ultimateSAM can be purchased with valves controlled by electric actuators for precise modulation of steam flow into the AHU/duct;
- different configurations of ultimateSAM are available for applications with high steam flow-rates or if the required non-wetting distance is particularly short;
- the single-pipe version is insulated and is supplied with a manifold that also acts as steam trap.

ultimateSAM

SAB*, SAT*

The ultimateSAM system can use both steam from a pressurised distribution network or from a generator at atmospheric pressure (humidifier).
When supplied by a pressurised steam line, the fluid reaches the distributor via a regulating valve, which expands the steam until almost atmospheric pressure.
When steam is supplied at atmospheric pressure, no valve is fitted between ultimateSAM and the steam generator, with steam flow-rate being modulated based on demand and managed directly by the humidifier.
To minimise condensate formation, the steam distribution pipes have been designed with baffles and nozzles that ensure only dry steam is delivered into the AHU/duct.
ultimateSAM can be ordered with insulated upright distribution pipes, featuring a cushion of air that reduces both heat gain and condensate formation.
On insulated distributors, the nozzles pressed into the pipes take dry steam from the centre of the distributors so as to prevent the release of condensate into the air stream. On the other hand, if the uprights are not insulated, no nozzles are fitted. Insulated models with nozzles reduce condensate formation by 30% compared to non-insulated models. In both cases, naturally, a short not-wetting distance is guaranteed (around ½ a metre).

ultimateSAM single pipe

SA0*

This can be used with pressurised steam or steam at atmospheric pressure. The manifold in this case also acts as a steam trap, being fitted with a baffle on the inside, as well as ensuring condensate drainage. The single-pipe version comes with insulation and nozzles to reduce condensate formation and non-wetting distance.
Accessories available for the single-pipe version:

- SAKC*S10*0: condensate drain hose kit;
- SAKC0*T0*0: condensate drain T connection kit;
- SAKD0*10*0 and SAKD0*20*0: steam inlet kit for double-pipe version.

Condensate separator manifold

In the single pipe versions, the manifold acts as a condensate separator. Thanks to the deflector, the steam is forced to follow a path in which it is separated from any condensate drained through the discharge terminal. Only dry steam therefore enters the distributor pipe.

ultimateSAM compact

SAB*M*

Compact version of the ultimateSAM distributor for smaller ducts.

The smaller version has two pipes and can be installed in 300 mm x 300 mm ducts. ultimateSAM compact does not require steam inlet kits or condensate drain kits, as these are fitted as standard on the product.

In the compact version the steam pipes are all insulated, 45 mm in diameter and spaced 102 mm apart.

Accessories

Modulating valves
(SAKV*)

Modulating valves with electric actuator and automatic safety closing in the event of power failures: the modulating valves control steam flow-rate based on a signal from an external controller; this is required for systems supplied by pressurised steam.

Steam inlet connections
(SAKI*)

The ultimateSAM humidification system includes a variety of steam inlet adapters, so as to offer maximum installation flexibility. All the adapters are made from stainless steel and are sized for easy connection to all the other components in the system.

Steam traps, condensate drains and Y-strainers
(SAKT*P*, SAKT*D*, SAKT*B*) and (SAKT*F*)

The steam trap + condensate drain assembly prevents condensate from forming in the supply line to the valve and steam dispersion system.
The filters remove all types of impurities that may be entrained in the piping.

Condensate drain kit
(SAKC*S10*0) for SA0*; (SAKC*ST100, SAKC*S1200) for SAB/SAT

Stainless steel condensate drain connection for single pipe models.
Stainless steel condensate drain connection and pipe for the ultimateSAM Bottom and Top versions.

Anti-condensate nozzles

To ensure a very short absorption distance and have only dry steam injected into the AHU/duct, the pipes (AISI 304 steel) are equipped with nozzles (Ryton - PPS) that take the steam from the middle of the pipe, away from the walls where condensate may form.

Pipe insulation

The pipes can be ordered with air gap insulation. An AISI 304 steel structure isolates the steam pipe from direct contact with the air in the AHU/duct, thus reducing condensate formation by 30%.

ultimateSAM table

Models	Description	Maximum steam flow-rate at	Portata vapore massima in pressione
SA0*	Single-pipe version	From 20 kg/h to 50 kg/h (44 lbs/h to 110 lbs/h)	From 20 kg/h to 140 kg/h -
SAB*	Multi-pipe version with steam supply from the bottom	From 15 kg/h to 370 kg/h (33 lbs/h to 814 lbs/h)	
SAT*	Multi-pipe version with steam supply from the top	From 60 kg/h to 1110 kg/h (132 lbs/h to 2447 lbs/h)	

Dimensions in mm (in) and weights in kg (lb)

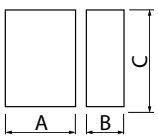

Model	AxBxC	weight
SAB*	289x124x289 / 3031x135x3030 (11,4x4,9x11,4 / 119.33x5.31x119.29) in 76, 102, 152, 304 mm steps (3", 4", 6", 12")	7.5 to 202.5 (17 to 446)
SAT*	447x135x749 / 3031x135x3181 (17.60x5.31x29.49 / 119.33x5.31x125.24) in 76, 152, 304 mm steps (3", 6", 12")	10 to 213.5 (22 to 470)
SA0*	pipe length 383 to 2055 mm (15.08-80.90) B=C= 160 mm (6.30)	4to 8.81 (8.7 to 19.4)

Part number

height:
A= 598 mm (24")
...
Q= 3030 mm (120")

R= 289 mm (11")
S= 441 mm (17")
(only for ultimateSAM compact)

pipe insulation:
I= with insulation
N= without insulation
(in case of sinlge pipe SA0 only "I")

only for ultimateSAM compact:
A= with insulation, ingresso Ø40 mm
B= with insulation, ingresso 1'G
C= with insulation, ingresso 1'NPT

drain:
0= threaded gas connection
U= NPT connection (US market)

type:
B= less steam inlet
T= top steam inlet
0= single tube

S	A	_	_	_	_	_	_	_	0

width:
A= 447 mm (18")
...
R= 3031 mm(120")

solo per ultimateSAM compact:
S= 289 mm (11")
...
W= 697 mm (27")

pipe type:
S= ø 35 mm, step 152 mm
L= ø 45 mm, step 152 mm
H= ø 35 mm, step 76 mm
A= ø 35 mm, step 304 mm
B= ø 45 mm, step 304 mm
M= ø 45 mm, step 102 mm (only for ultimateSAM compact)

support frame:
0= without frame, disassembled
1= without frame, assembled
2= with frame, disassembled
3= with frame, assembled
4...7, A...D= with frame, assembled, steam inlet and assembled accessories

OVERVIEW DRAWING ultimateSAM

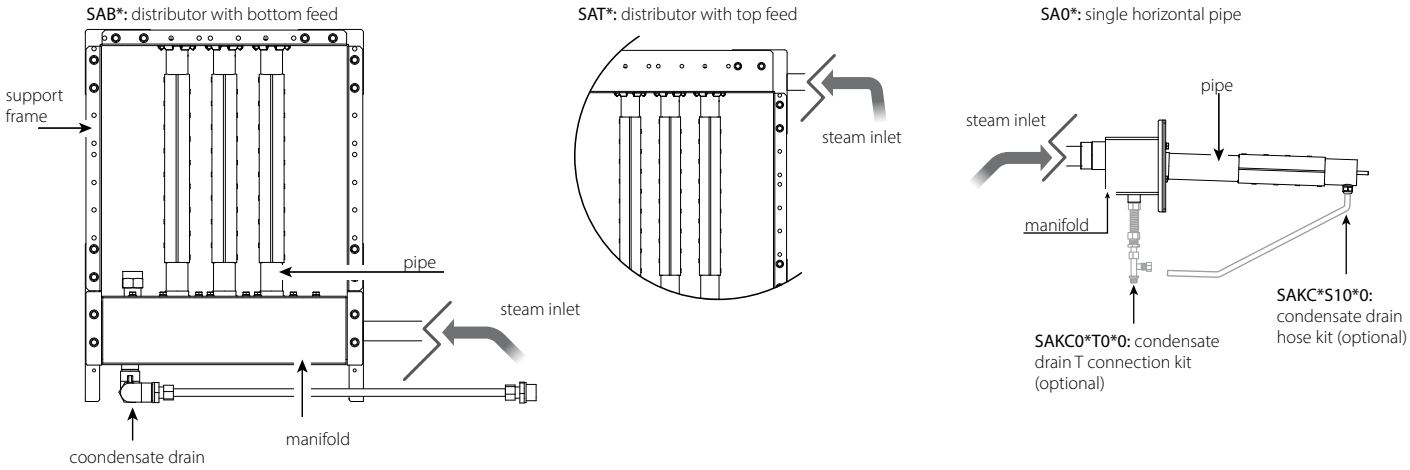

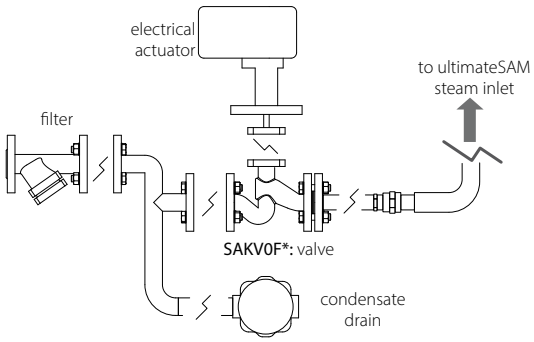

application with steam under pressure

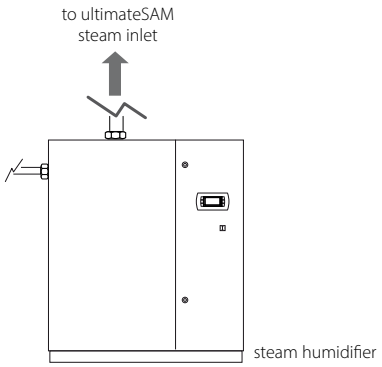

application with steam at atmospheric pressure

Accessories

These accessories are available for the humiSteam, compactSteam, heaterSteam and gaSteam humidifiers. The CAREL range of accessories for isothermal humidifiers have been especially developed to allow the creation of humidification systems that are complete and suitable for all types of application.
The fundamental idea is to guarantee optimum operation of the humidification system by providing the installer, maintenance personnel and user all the auxiliary components that simplify installation, steam distribution, operation and control of the humidifier.

The new high-efficiency linear steam distributors are the first to feature thermal insulation so as to reduce condensation in the ducting.
This innovation brings extremely positive results in terms of energy efficiency: tests have in fact shown a reduction of at least 20% in condensation when compared to standard steam distributors.

☑ UE ☑ UR
☑ CH ☑ UG

Steam distributors for ducts

DP***D**R*

The wide range of linear steam distributors for ducts in the "DP" series is made up of perforated stainless steel pipes supported by a fastening bracket made from Ryton®.
This material combines excellent mechanical characteristics with extraordinary resistance to high temperatures.
The new fastening bracket allows the steam distributor to be fastened vertically to a wall, guaranteeing the correct incline of the distributor for draining condensate.
The stainless steel linear steam distributors are available in 3 different diameters (35, 45 and 60 mm), which couple respectively to the 22, 30 and 40 mm diameter steam hoses used on the entire range of CAREL humidifiers.
These distributors are designed to release steam in a uniform manner along the entire length, so as to minimise non-wetting distance.

☑ UE ☑ UR
☑ CH ☑ UG

High-efficiency steam distributors

DP******RH

These new steam distributors complete the current product range, thus providing a response to all customer needs, also in terms of energy savings.

The air cushion, acting as an insulator between the steam pipe and the outer jacket, reduces heat exchange between the hot steam inside the distributor and the lower-temperature air in the duct/AHU: this reduces condensation by at least 20%.

Just like in the other versions, excellent steam distribution is ensured by the modular construction, making it possible to virtually cover all duct/AHU widths and exploit as much air flow as possible.

The lengths range from 350 mm to 2050 mm, in 30 mm or 40 mm diameters.

☑ UE ☑ UR
☐ CH ☑ UG

Steam blowers

VSDU* , VRDX*

The steam blowers for rooms (VSDU0A0003) are suitable for humidifiers up to 18 kg/h.
The steam blower can be fitted directly onto the humidifier, or in a remote position. In the latter case, a support is required for mounting the blower (VSDBAS0001), as well as a steam hose to connect the blower to the humidifier.
The steam blower works in ON/OFF mode, and is controlled by a temperature device that is activated when steam is produced.
For humidifiers larger than 18 kg/h, the VRDXL00001 steam blowers are available, with 230 Vac power supply; these are designed for installation separately from the humidifier, and require two 40 mm diameter steam hoses.
The new generation of blowers guarantees:

- a steam absorption distance of around one metre, allowing the unit to be positioned in complete safety;
- a range of steam production modulation from 0 to 100%;
- backward compatibility with existing installations.

☑ UE ☑ UR
☑ CH ☑ UG

Fill pipe

FWH*

FWHDCV0003: water fill kit
FWH3415003: hose L=1.5 m
FWH3430003: hose L=3 m
9997*ACA: straight and elbow quick connector
1312350APN: hose with 6 mm ID and 8 mm OD.

The FWHDCV0003 kit includes the FWH3415003 hose and a double non-return valve. The kit has been designed both to ensure conformity to standards that require the use of a double non-return valve upstream of the humidifier (WRAC), and to avoid breakages of the fill valve due to direct connection to metal mains water pipes. The plastic fill solenoid valve may be damaged if connected directly to metal mains water pipes: using hoses with plastic fittings, FWH3***003, eliminates this risk.
The FWH3***003 hoses are available in two lengths: 1.5 m and 3 m, with two ¾" female GAS connectors (one straight and one elbow). Alternatively, the 6 mm hose and the quick connectors described below can be used. The straight or elbow connector (999572*ACA) is screwed onto the fill solenoid valve and can be quickly fitted by tightening a nut to the 6 mm water fill hose (1312350APN).

☑ UE ☑ UR
☑ CH ☑ UG

Condensate drain hoses

13123*

1312353APG: 7 mm
1312368AXX: 10 mm
1312357APG: 40 mm (1 m lengths)

The condensate that forms inside the steam distributors must be drained using the 7 mm hose for the steam blowers, and the 10 mm hose for the "DP" linear distributors for ducts, also used for SDPOEM00** distributors.
The water drain hose is the same for all isothermal humidifiers and is made from rubber resistant to 100 °C.

☑ UE ☑ UR
☑ CH ☑ UG

Steam hoses

13123*

(1312360AXX - 1312365AXX - 1312367AXX - 1312461AXX hose for cylinders with 22/30/40/80 mm fitting and harmonic steel coil - outside diameter 32/41/52/95 mm).

The steam distribution hoses are made from rubber resistant to 105 °C in continuous operation without the emission of odours, and suitable for use with foodstuffs. The harmonic steel coil immersed in the rubber gives the hose flexibility and strength, preventing it from being choked and blocking the flow of steam.
The KITVAP3040 adapter is available for changing diameter from 30 mm to 40 mm.

☑ UE ☑ UR
☑ CH ☑ UG

Steam nozzles

(SDPOEM00**)

Steam nozzles for distributing steam into small ducts or steam baths (SDPOEM0012 for models from 1 to 3 kg/h, SDPOEM0022 for models from 5 to 18 kg/h, SDPOEM0000).

☑ UE ☑ UR
☐ CH ☑ UG

Fittings and connectors

(UEKY******)

If the humidifier steam outlet lines need to be branched, two stainless steel Y connectors are available, one with 40 mm inlet and two 30 mm outlets (UEKY000000), and one with 40 mm inlet and two 40 mm outlets (UEKY40X400).

High-efficiency steam distributor table

				humiSteam										
distributor inlet mm (in)	max. distributor capacity kg/h (lb/h)	min. duct/AHU width mm (in)	code	UE001	UE003	UE005	UE008	UE009	UE010	UE015	UE018	UE025	UE035	UE045
22 (0.9")	4 (8.8)	350 (13.7")	DP035D22R0	1	1									
22 (0.9")	6 (13.2)	450 (17.7")	DP045D22R0	1	1									
22 (0.9")	9 (19.8)	600 (23.6")	DP060D22R0	1	1									
22 (0.9")	9 (19.8)	850 (33.5")	DP085D22R0	1	1									
30 (1.2")	5 (11)	350 (13.7")	DP035D30R0			1								
30 (1.2")	8 (17.6)	450 (17.7")	DP045D30R0			1	1							
30 (1.2")	12 (26.4)	600 (23.6")	DP060D30R0			1	1	1	1					
30 (1.2")	18 (39.6)	850 (33.5")	DP085D30R0			1	1	1	1	1	1	(2)*	(2)*	
30 (1.2")	18 (39.6)	1050 (41.3")	DP105D30R0			1	1	1	1	1	1	(2)*	(2)*	
30 (1.2")	18 (39.6)	1250 (49.2")	DP125D30R0			1	1	1	1	1	1	(2)*	(2)*	
30 (1.2")	18 (39.6)	1650 (65")	DP165D30R0						1	1	1	(2)*	(2)*	
40 (1.6")	25 (55)	850 (33.5")	DP085D40R0									1	(2)**	(2)**
40 (1.6")	35 (77)	1050 (41.3")	DP105D40R0									1	1	(2)**
40 (1.6")	45 (99)	1250 (49.2")	DP125D40R0									1	1	1
40 (1.6")	45 (99)	1650 (65")	DP165D40R0										1	1
40 (1.6")	45 (99)	2050 (80.7")	DP205D40R0										1	1
22 (0.9")	4 (8.8)	300 (11.8")	DP030D22RU	1	1									
30 (1.2")	10 (22)	200 (7.9")	DP020D30RU	1	1	1	1	1	1					
30 (1.2")	15 (33)	300 (11.8")	DP030D30RU			1	1	1	1	1	2 (i)	(2)*		
30 (1.2")	15 (33)	450 (17.7")	DP045D30RU			1	1	1	1	1	2 (i)	(2)*		
30 (1.2")	15 (33)	600 (23.6")	DP060D30RU			1	1	1	1	1		(2)*		
40 (1.6")	45 (99)	600 (23.6")	DP060D40RU									1	1	1
High-efficiency verions														
30 (1.2")	5 (11)	350 (13.7")	DP035D30RH			1								
30 (1.2")	8 (17.6)	450 (17.7")	DP045D30RH			1	1							
30 (1.2")	12 (26.4)	600 (23.6")	DP060D30RH			1	1	1	1					
30 (1.2")	18 (39.6)	850 (33.5")	DP085D30RH			1	1	1	1	1	1	(2)*	(2)*	
30 (1.2")	18 (39.6)	1050 (41.3")	DP105D30RH			1	1	1	1	1	1	(2)*	(2)*	
30 (1.2")	18 (39.6)	1250 (49.2")	DP125D30RH			1	1	1	1	1	1	(2)*	(2)*	
30 (1.2")	18 (39.6)	1650 (65")	DP165D30RH						1	1	1	(2)*	(2)*	
40 (1.6")	25 (55)	850 (33.5")	DP085D40RH									1	(2)**	(2)**
40 (1.6")	35 (77)	1050 (41.3")	DP105D40RH									1	1	(2)**
40 (1.6")	45 (99)	1250 (49.2")	DP125D40RH									1	1	1
40 (1.6")	45 (99)	1650 (65")	DP165D40RH										1	1
40 (1.6")	45 (99)	2050 (80.7")	DP205D40RH										1	1
humidifier capacity kg/h				1	3	5	8	9	10	15	18	25	35	45
humidifier outlet Ø mm				22 /30 (0.9")/(1.2")		30 (1.2")						40 (1.6")		

NB: if the duct does not feature the required width for the distributor, two shorter distributors (numbers indicated in brackets) can be used, branching the steam hose.
*: use Carel "Y" kit UEKY000000, 40 mm (1.6") inlet and 2 x 30 mm (1.2") outlets
**: use Carel "Y" kit UEKY40X400, 40 mm (1.6") inlet and 2 x 40 mm (1.6") outlets
[a] use Carel kit SAKIT40200, 80 mm (3.1") inlet and 2 x 40 mm (1.6") outlets
[b] use Carel kit SAKIT40400, 80 mm (3.1") inlet and 4 x 40 mm (1.6") outlets
[i] use Carel "Y" kit UEKY000000 and KITVAP3040, 30 mm (1.2") inlet and 40 mm (1.6") outlet

				heaterSteam											gaSteam		
	UE065	UE090	UE130	UR002	UR004	UR006	UR010	UR013	UR020	UR027	UR040	UR053	UR060	UR080	UG045	UG090	UG150
				1	1												
				1	1	1											
					1	1	1		(2)*								
					1	1	1	1	(2)*	(2)*							
					1	1	1	1	(2)*	(2)*							
					1	1	1	1	(2)*	(2)*							
							1	1	(2)*	(2)*							
	(4)**	(4)**							1	1	(2)**	(4)**	(4)**	(4)**	2 (a)	4 (b)	
	2	(4)**	4						1	1	(2)**	2	2	(4)**	2 (a)	4 (b)	
	2	2	4						1	1	1	2	2	2	2 (a)	2 (a)	4 (b)
	2	2	4							1	1	2	2	2	2 (a)	2 (a)	4 (b)
	2	2	4								1	2	2	2	2 (a)	2 (a)	4 (b)
				1	1	1	1										
				1	1	1	1	1	(2)*	(2)*							
				1	1	1	1	1	(2)*	(2)*							
					1	1	1	1	(2)*	(2)*							
	2	2	4						1	1	1	2	2	2	2 (a)	2 (a)	4 (b)
				1	1												
				1	1	1											
					1	1	1		(2)*								
					1	1	1	1	(2)*	(2)*							
					1	1	1	1	(2)*	(2)*							
					1	1	1	1	(2)*	(2)*							
							1	1	(2)*	(2)*							
	(4)**	(4)**							1	(2)**	(2)**	(4)**	(4)**	(4)**	2 (a)	4 (b)	
	2	(4)**	4						1	1	(2)**	2	2	(4)**	2 (a)	4 (b)	
	2	2	4						1	1	1	2	2	2	2 (a)	2 (a)	4 (b)
	2	2	4							1	1	2	2	2	2 (a)	2 (a)	4 (b)
	2	2	4								1	2	2	2	2 (a)	2 (a)	4 (b)
	65	90	130	2	4	6	10	13	20	27	40	53	60	80	45	90	150
	2x 40 (1.6”)		4x 40 (4x 1.6”)	30 (1.2”)					40 (1.6”)			2x 40 (1.6”)			80 (3.1”)		

For typical installations of linear distributors see figures below

1

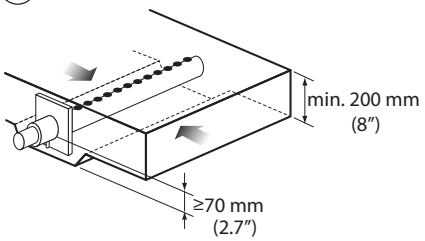

2

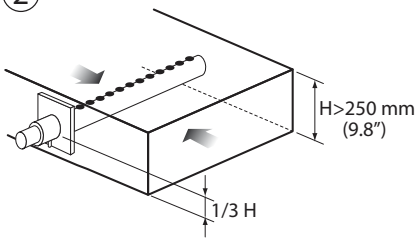

3

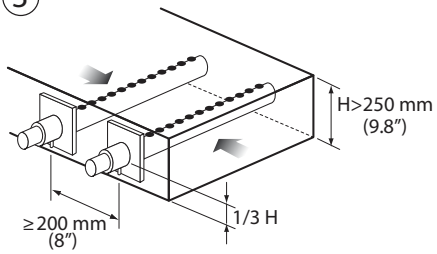

4

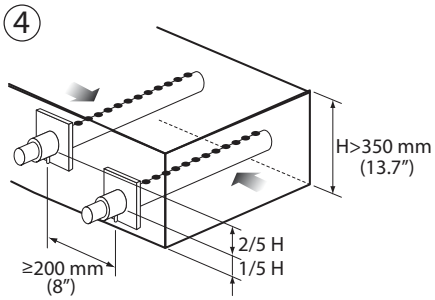

5

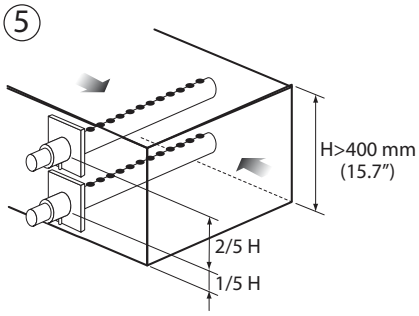

6

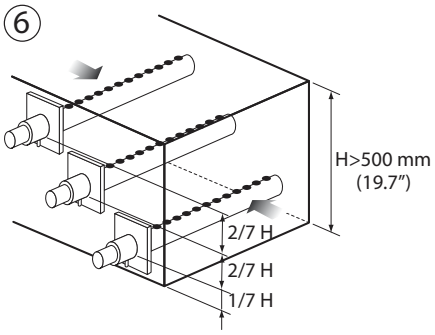

7

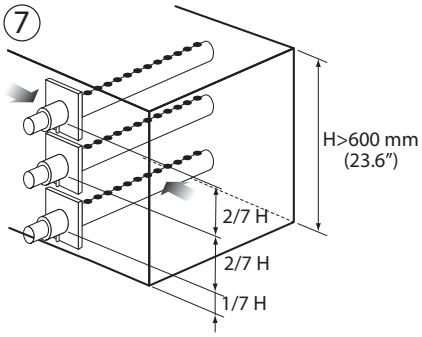

8

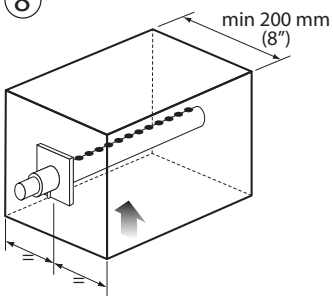

9

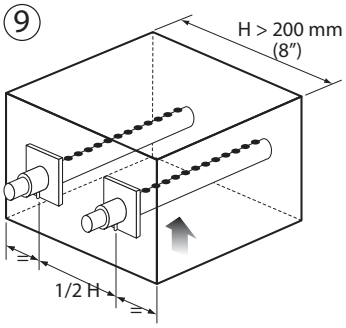

10

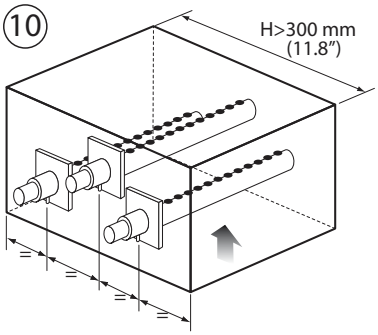

11

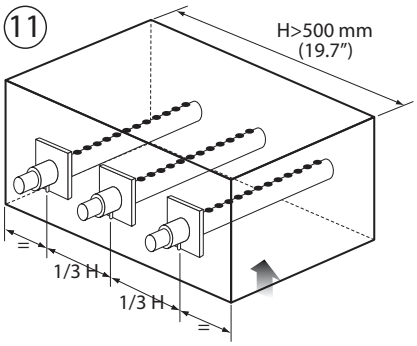

Adiabatic humidification

+800C03001 - REV 03

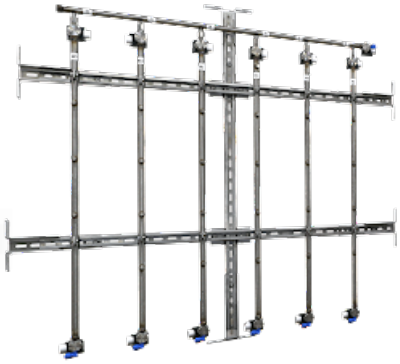

Pressurised water humidifiers

The humiFog range of atomising humidifiers exploit the high water pressure produced by a volumetric pump to obtain very fine atomisation through special nozzles.
The most common application of these humidifiers is in AHUs, where the distribution system is installed.
In industrial environments for processing wood or paper, or in the textiles industry, systems are often used to distribute atomised water directly into the rooms.
As well as humidity control, pressurised water atomisers are the best solution for fully exploiting the potential offered by evaporative cooling, both direct and indirect. In fact, every litre of water absorbed by the air gives a cooling effect of around 690 W.
One crucial aspect is the hygiene that pressurised water humidifiers must guarantee in the application where they are used. Management of washing cycles, the materials used and the configuration of the atomised water distribution system are the main features that guarantee CAREL humidifiers comply with the strictest hygiene regulations in force (VDI6022).

Energy saving

The only energy humiFog consumes is used to power the water pump, just 4 watts for every l/h of capacity.
In addition, an inverter is used to modulate pump speed on the humiFog, meaning both more precise control and even lower power consumption.
The electrical power installed is therefore much lower than that required for a traditional isothermal humidifier.

Backup & rotation

On the latest version of humiFog, the back-up & rotation function has been implemented, fundamental for process applications that that require continuous service and zero downtime.

Benefits

- **very low power consumption:** consumes just 4W per l/h capacity, less than 1% of any steam humidifier;
- **summer/winter operation:** humidifies the air during winter, cools the air in summer by direct and indirect evaporative cooling;
- **multi-zone configuration:** lathe humiFog range allows a single pumping station to supply more than one distribution system, either in the duct or in the room, with significant savings in investment and maintenance costs;
- **maximum hygiene:** suitable for all applications that require a high level of hygiene (VDI 6022).

humiFog multizone

UA*H*, UA*Z*

Configurations

The humiFog system can be used in the following configurations:

Single-zone or multi-zone configuration

The humiFog single-zone configuration can be used to control humidity in an individual air handling unit.
In this configuration, modulation is implemented by managing the opening of different sets of nozzles and varying the water pressure in the range from 25 to 70 bars, using an inverter. This ensures perfectly calibrated and modulated humidity production based on the actual load.

humiFog is also a competitive adiabatic atomiser that is especially suitable for multi-zone and high capacity installations.
In the multi-zone configuration, it can supply up to 12 different distribution systems in different AHUs/rooms with just one pumping station (unique feature on the market!), each controlled based on its own humidity request. Having just one pumping station significantly reduces installation and maintenance costs.

Configuration with distribution via duct or directly in the room

humiFog controls humidity by installing an atomised water distribution system inside an air handling unit or alternatively directly in the controlled space.

Hygienic aspects

Certification in accordance with the most recent European standards (VDI6022) make humiFog for AHU suitable for all applications, even the most demanding in terms of hygiene, such as hospitals.
humiFog does not use chemical biocides, but only pure and simple water. The combination of humiFog with a reverse osmosis demineralisation and UV lamp disinfection system guarantees the highest level of feedwater hygiene.
humiFog does not atomise recirculated water: the built-in controller automatically fills the supply lines only when humidification is required. At the end of the humidification cycle, all of the lines are drained so as to prevent stagnation of water in the system. If there is no humidification demand for an extended period, the lines are automatically washed. All of the components of the distribution system in contact with water are made from AISI316 stainless steel.

Preheating probe on the rack

humiFog is the only humidifier on the market able to modulate its operating capacity based on the preheating temperature measured at the height of the rack distribution system. This ensures high absorption efficiency even in transient operating conditions and in conditions where the optimum temperature has not been reached.

Feedwater specifications

For correct operation, the humiFog multizone system must be supplied with demineralised water (conductivity between 0 and 50 µS/cm). To obtain these values
in the feedwater, a reverse osmosis system is typically required. This treatment involves pumping water through a special membrane that, being permeable only to molecules that are the same size as H2O, removes almost all of the mineral salts in the water.
In addition to being a barrier that prevents the passage of bacteria, by eliminating mineral salts, reverse osmosis water treatment also reduces maintenance inside the AHU to simple periodic inspections!

Conductivity meter

The conductivity meter is used to monitor water quality and thus minimise maintenance. This achieves increased system hygiene, reliability and safety, as any problems are detected in the water treatment systems that supply the humidifiers.

Pulsation damper

The damper reduces the pressure peaks generated by the pump pistons so as to prevent them from being propagated along the pipes and distribution system.

7" touch display and configuration via USB flash drive

The new 7" touch display makes configuring and managing humiFog easy and intuitive. The display shows graphic maps of humidification system, from where the individual components can be controlled at a touch, making maintenance and troubleshooting much faster.
The humiFog Multizone Touch initial configuration parameters can also be downloaded directly from the Carel CPQ configuration tool, and then loaded onto the controller via the USB port, all guided by a step-by-step wizard. The configuration of even complex multizone systems can thus be completed from one single point of access in just a few minutes.

Services

Supervision and complete package of installation and maintenance services

Remote monitoring and interaction with the humiFog unit are available via the new DigitalHUM cloud portal, the plug&play solution for the remote management of humidifiers.
By connecting the unit to the "Cloudgate" gateway, the humidifier operating data are available at all times on the cloud, as support for maintenance and to manage and reduce operating costs.

The humiFog humidification system comes complete with the Modbus and BACNet communication protocols, making it ready for integration into BMS systems. Furthermore, it can also be connected to the local supervisor together with the rest of the HVAC system, using the boss local supervisory solutions. Boss is suitable for systems of all sizes, comes complete with WiFi for connection to any device, including mobile devices, and can communicate via Modbus, BACNet or SNMP protocols with BMS systems.

Integrated web server pages are also available for controller the humidifier, using an Ethernet connection to the local network.

Finally, depending on the country of installation, Carel can offer a complete package of after-sales services, including commissioning, warranty extension, scheduled maintenance and one-off service and repairs.

Certification

VDI

Carel has always paid the highest attention to the safety and hygiene of its proposed solutions: the humiFog range are thus also certified in compliance with the VDI regulations, now recognised as an international standard. The built-in controller automatically manages the washing, filling and emptying cycles, preventing the water from stagnating before being atomised into the humidified environment.

Silicone-free

The humiFog pump is also available in the silicone-free stainless steel version. The absence of silicone is essential in paint spray booths, to avoid the finish defect known as fisheye. Certification has been accredited by an external laboratory and is available on request.

ATEX

humiFog also responds to the need to guarantee a safe workplace for applications subject to ATEX classification. The distribution system is the result of careful analysis of design and materials, in full compliance with standards, eliminating sources or ignition from potentially explosive areas.

Components for installation in AHUs

Custom atomisation rack
(RH*)

The custom atomisation rack for AHUs comprises atomisation nozzles and shut-off valves, used to control the number of active racks, and drain valves for emptying the rack. All of the metal parts are made from stainless steel. The system can be supplied either partially assembled or completely assembled.

Wired solenoid valve option
A version of the atomisation rack is also available with the solenoid valves already wired, making connecting the rack to the zone controller extremely quick and easy.

ATEX installation option (potentially explosive atmospheres)
A version of the atomisation rack is available with the solenoid valves placed on a manifold positioned outside of the duct, in order to avoid the presence of electrical components inside the duct.

Certified mist eliminator for AHUs
(UAKDS*, ECDS10*)

The mist eliminator has the purpose of trapping the droplets of water that are not completely evaporated, so as to prevent them from leaving the humidification chamber. The eliminator is supplied in standard modules that can be assembled to cover the cross-section of the AHU.
It is available in two versions: with fibreglass or steel filtering material, the latter required for VDI6022 certified installations.

Zone panel

Manages the distribution system in an individual AHU. Multiple panels (up to 12) can be connected to control several AHUs with one single humiFog pumping station.

Components for room installation

Blowers
(DLA*)

The new blowers allow
easy configuration and installation of the humidification system in the room.

The blowers are:
- available in various configurations: they can atomise in one direction only, or in two opposite directions, with 2, 4 and 8 nozzle configurations;
- already assembled and tested.
- easy to install: thanks to the mounting systems provided, they can be installed either on the ceiling or on the wall, so as to control humidity right where it is needed.

	One side		Two sides	
Nozzles	2	4	4	8
Capacity (l/h)	3-8	6-16	6-16	12-32

Direct box
(UAKDLA*)

The Direct Box units, in the Hydraulic and Electric versions (P/N UAKDLA), are used to interface humiFog multizone, both pumping station and slave remote panel, to the blowers (P/N DLA) used for direct atomisation in the room. The Direct Box units are supplied in the single- and two-zone configurations. The units must be installed in the room taking into account the free space needed to guarantee complete absorption of the atomised water.

Example of operation with direct and indirect evaporative cooling

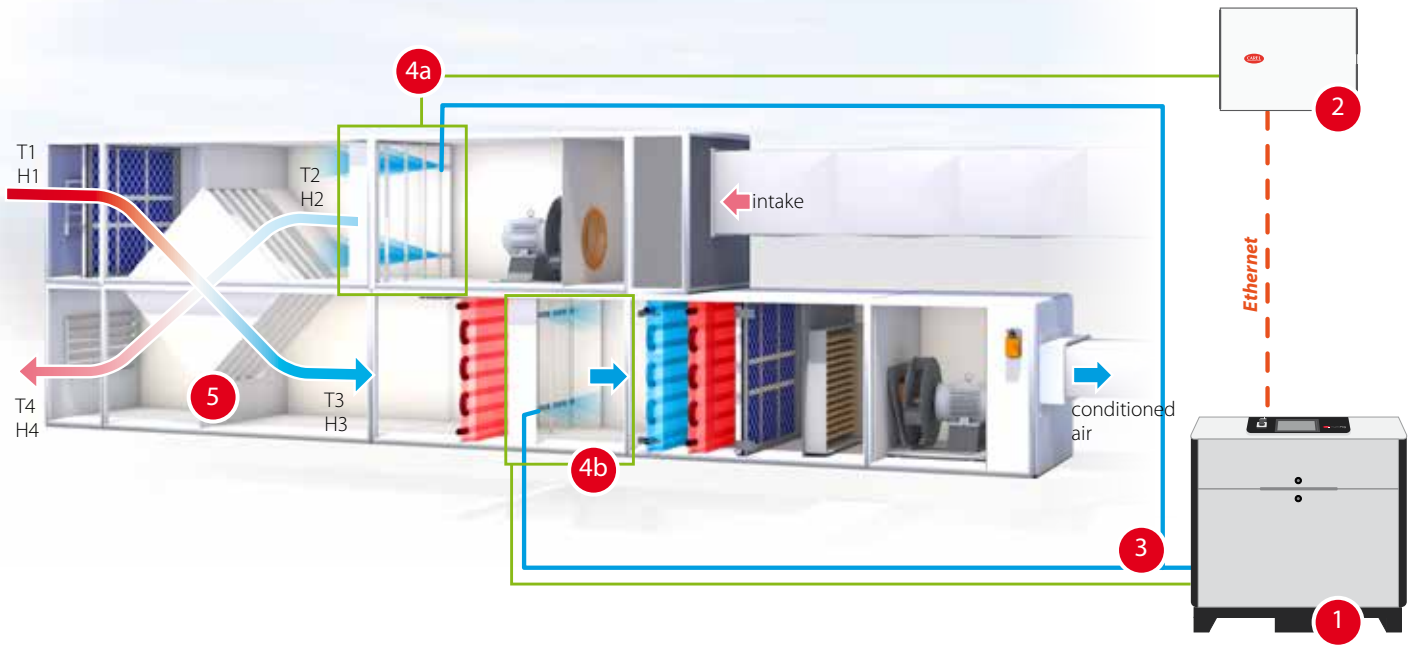

Winter/summer operation

The winter/summer function allows air humidification in winter, while in summer humiFog is used to evaporatively cool the inlet air.

Direct evaporative cooling

This extends the range in which free cooling can be used, by evaporatively cooling the inlet air, while always controlling the relative humidity set point (4b).

Indirect evaporative cooling

This is applied to the exhaust air, which can be cooled by several degrees without limits in terms of humidity (the air is discharged by the AHU), by flowing first through a cross-flow heat exchanger together with the inlet air. This pre-cools the fresh air, reducing the capacity required by mechanical cooling (chiller) to bring the air to the desired conditions, thus reducing power consumption.
The efficiency of this solution depends on the heat recovery unit used and the outside climatic conditions, yet easily exceeds 50% (see the example below).
The humiFog multizone is perfect for these types of applications in AHUs.

1. *pumping station and controller zone for humidification in winter and direct evaporative cooling*
2. *zone controller for indirect evaporative cooling*
3. *pressurised water line*
4. *a: rack for indirect evaporative cooling*
   b: rack for direct evaporative cooling
5. *heat recovery unit*
6. *droplet separator*

	Outside air		Exhaust air		Cooled outside air		Outlet air		Cooling capacity*
	T_1	H_1	T_2	H_2	T_3	H_3	T_4	H_4	P
WITHOUT evaporative cooling	**35 °C**	40% RH	25 °C	50% RH	**29 °C**	56% RH	31 °C	36% RH	58 kW
WITH evaporative cooling	**35 °C**	40% RH	18 °C	saturation	**25 °C**	70% RH	28 °C	55% RH	100 kW
								Additional capacity	42 kW

In the example shown in the table, the exhaust air is pre-cooled to 18 °C and then used by the heat exchanger to cool the outside air from 35 to 25°C, a decrease of 10 °C, without increasing absolute humidity.
*: The cooling capacity is calculated based on an outside air flow-rate of 30000 m3/h, atomising 100 kg/h of water, and a heat recovery unit with an efficiency of 58%.

humiFog multizone Touch table

Specifications	UA1501D5**	UA3001D5**	UA5001D5**	UA8001L5**	UA1K21L5**
Installation conditions					
Ambient temperature	5T40 °C (41T104 °F)				
Ambient relative humidity	0-90% rH				
Water circuit data					
Flow-rate (kg/h) (gal/d)	150 (951)	300 (1902)	500 (3170)	800 (5072)	1200 (7608)
Feedwater conductivity (µS/cm)	< 50				
Feedwater pressure (bars) (PSI)	2 to 5 (40 to 100)				
Feedwater temperature (°C) (°F)	5 to 40 (41 to 104)				
Water inlet connections to the cabinet	G3/4"F				
Water connections from the cabinet to the rack	M16x1.5 M			M22x1.5 M	
Water drain connections	G1/4"F				
Physical specifications					
Weight (kg) (lb)	94 (207)	95 (209)	105 (231)	117 (258)	116 (256)
Dimensions mm (inch)	width: 850 (33); depth: 480 (19); height: 945 (37)				
Clearance required (mm) (inch): top - sides - front	500 (20) - 500 (20) - 1000 (40)				
Ingress protection (IP)	IP20				
Electrical specifications					
Voltage (Vac)	230 (±10%)			400 (±10%)	
Electrical phases	1			3	
Frequency (Hz)	50/60 (±1%)				
Power consumption (kW)	0.65	1.25	1.65	3.35	4.35
Current (A)	4.8	7.4	10	3.9	4.9

Zone control panel

Specifications	UA000SD500	UA000S2500	UA000SU500
Installation conditions			
Ambient temperature	5T40 °C (41T104 °F)		
Ambient relative humidity (rH)	0-90% rH		
Physical specifications			
Weight (kg) (lb)	19.6 [43]		
Dimensions mm (inch)	width: 491 (19.3); depth: 155 (6.1); height: 433 (17)		
Clearance required (mm) (inch): top - sides - front	500 (20) - 500 (20) - 1000 (40)		
Ingress protection (IP)	IP20		
Electrical specifications			
Voltage (Vac)	230 (±10%)		208 (±10%)
Electrical phases	1		
Frequency (Hz)	50 (±1%)	60 (±1%)	60 (±1%)
Power consumption (kW)	0,5		
Current (A)	2.2		2.5

Dimensions in mm (in) and weights in kg (lb)

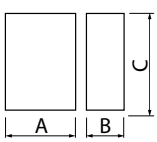

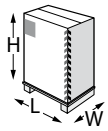

Mod.	AxBxC	weight	LxWxH	weight
UA main cabinet	850 x 480 x 945 (33.5 x 18.9 x 37.3)	94 to 116 (206.8 to 255.2)	975 x 620 x 1135 (38.5 x 24.5 x 44.7)	104 to 126 (228.8 to 277.2)
UA zone control	491 x 155 x 433 (19.4 x 6.1 x 17.1)	19.6 (43.2)		22,2 (43.2)

Part number

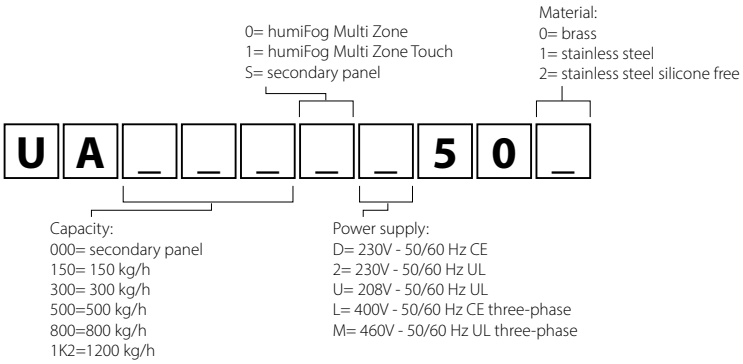

OVERVIEW DRAWING humiFog

duct applications

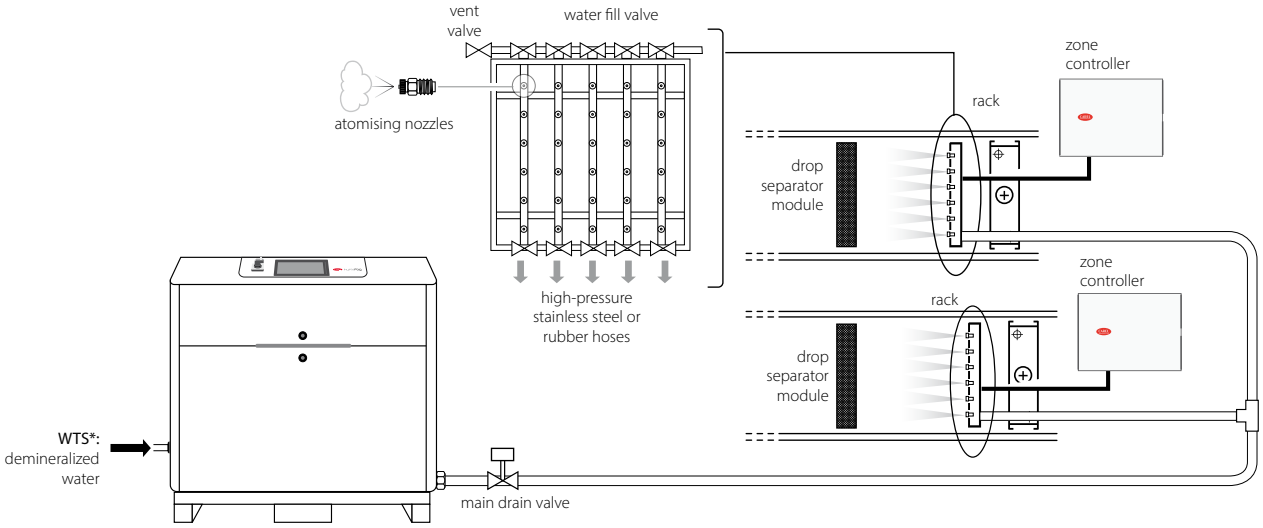

room applications

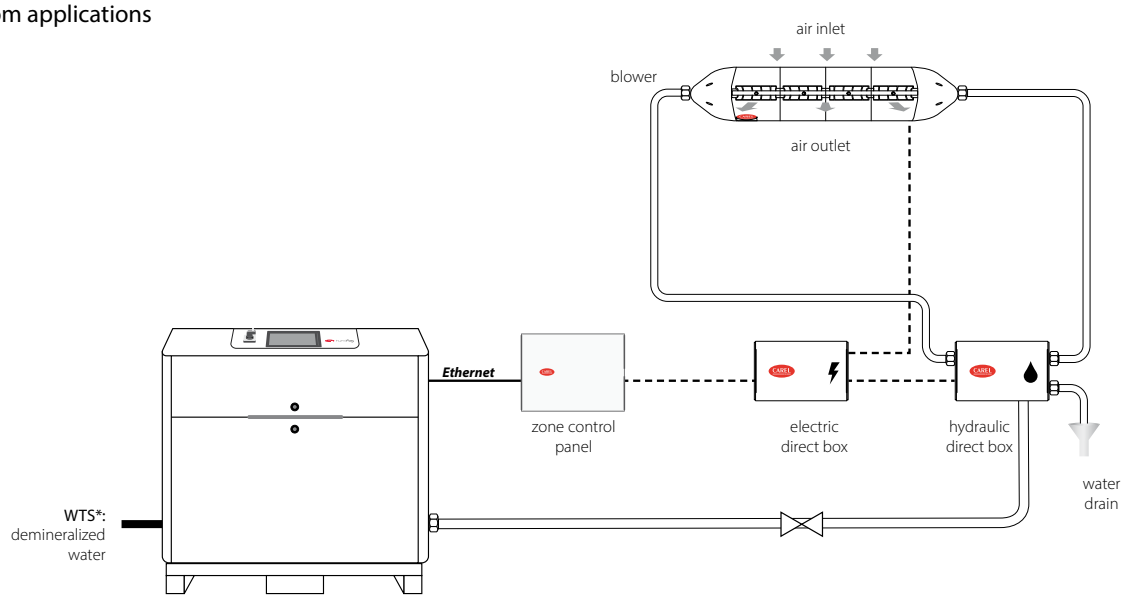

humiFog direct

UA*D*

humiFog direct is the CAREL solution for direct in-room adiabatic humidification. Introducing pure water in the form of very fine droplets that evaporate spontaneously in the air ensures the right level of relative humidity with very low energy consumption.

Moreover, thanks to the evaporative cooling effect, the heat generated inside the environment is absorbed, lowering the temperature without wasting further energy for cooling.
humiFog direct is hygienically safe, as thanks to the automated line washing cycles, it always atomises fresh and clean water.
Designed for industrial environments, especially in the case of retrofits, it combines maximum reliability with low operating costs. An effective and easy-to-install system that adapts to all contexts, even the most complex ones.

Control cabinet

The powerful and high-performance pumping station can deliver water at a constant pressure of 70 bars, for maximum performance with very low energy consumption. The system can manage two different zones, with different set points. The solution is modular and thus easily expandable to cover different humidification loads.

CAREL c.pHC controller

The c.pHC electronic controller for humiFog direct has been designed to ensure easy start-up, simple management and maximum system reliability.

Performance

The system is controlled based on the signal from a probe or external controller. When humidification or cooling are needed, the system starts the pump, which delivers water at high pressure (70 bars). After the initial stage in which line is washed and filled, the blowers will begin to atomise the water into droplets measuring just a few microns in diameter. The anti-dripping system means there is no risk of dripping when the system stops.
Capacity modulation is managed using the PWM principle (pulse width modulation), for precise and reliable humidity control.

Connectivity

The webserver allows direct access to the unit's display from any PC or tablet connected to the same local network as the humidifier.
This allows configurations to be set in the exact same way as directly on the unit, including all the main control settings and configurations, as well as checking unit status.

Models of blowers for rooms

Characteristics	Single blowers		Double blowers	
	DLA**DF*	DLA**UF*	DL**DB*	DL**UB*
Water inlet	M12 x 1 male			
Water outlets	M12 x 1 male			
Outlet fan power	230 Vac, 50 Hz	120 Vac 60 Hz	230 Vac, 50 Hz	120 Vac 60 Hz
Capacity - kg/h	3; 5,6 ; 6; 8; 11,2; 16		6; 11,2; 12; 16; 22,4; 32	
Fan air flow-rate	300 m^3/h model with 2 nozzles, 600 m^3/h model with 4 nozzles		700 m^3/h model with 4 nozzles, 1500 m^3/h model with 8 nozzles	
Maximum distribution line length - m	100 m (last blower 50 m from the inlet valve). Contact CAREL for greater lengths		-	

humiFog direct table

Features	UA040*	UA080*	UA050*	UA090*
General				
Rated capacity - kg/h	40	80	50	90
Power supply	230 V, 1 fase, 50 Hz		120 Vac, 1 fase, 60 Hz	
Pumping unit power consumption - kW	0,28	0,28	0,38	0,38
Operating conditions	2T40°C, 5-95% non-condensing			
Storage conditions	-10T50°C, <90 % RH non-condensing			
Degree of protection	IP20			
Water fill				
Connection	G3/4"F			
Water pressure limits - bar/MPa	3…8 (0,3…0,8)			
Conductivity limits - µS/cm	<80 µS/cm			
Water outlet				
Connection	M16x1,5 DIN 2353 (G1/4" F)			
Outlet water operating pressure - bars	70			
Water drain				
Connection Ø - mm	G1/2" F			
Network				
Network connection	Modbus®, Bacnet® via Ethernet and RS485			
Control				
Control	external signal, temperature or humidity control; additional temperature or humidity limit probe			
Type of input signals	0 to 1 V, 0 to 10 V, 2 to 10 V, 0 to 20 mA, 4 to 20 mA, NTC			
Functional characteristics				
Number of probes allowed (temperature and/or humidity)	1 (single zone) + limit 2 (two zones) + limit			

Dimensions in mm (in) and weights in kg (lb)

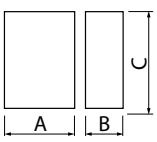

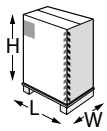

Mod.	AxBxC	weight	LxWxH	weight
UA	630x800x300 (24.8x31.5x11.8)	60…68 (132 to 149)	720x1020x460 (28.5x40x18)	64…72 (141 to 158)

Part number

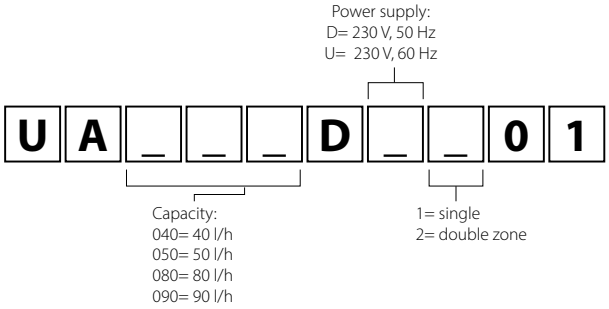

OVERVIEW DRAWING humiFog Direct

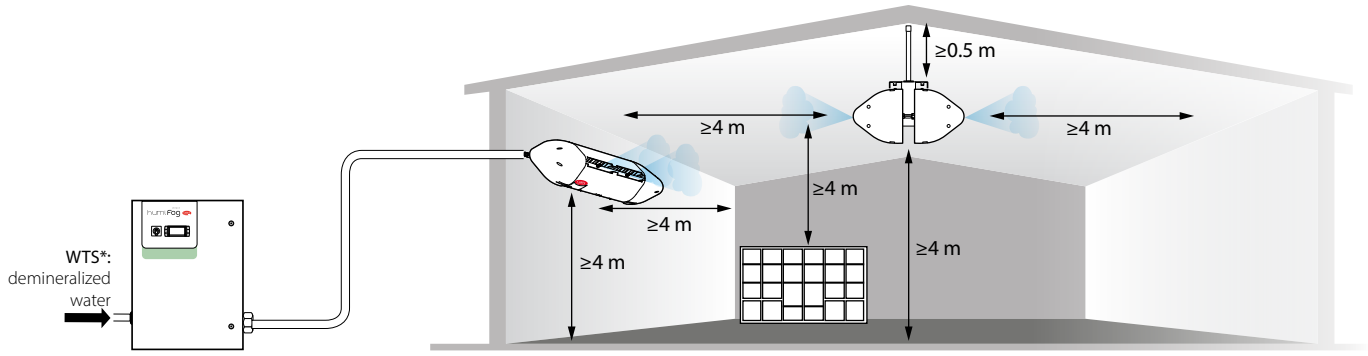

Accessories and options for in-room installation

Blowers
(DLA*)

The new blowers allow
easy configuration and installation of the humidification system in the room.

The blowers are:
- available in various configurations: they can atomise in one direction only, or in two opposite directions, with 2, 4 and 8 nozzle configurations;
- already assembled and tested;
- easy to install: thanks to the mounting systems provided, they can be installed either on the ceiling or on the wall, so as to control humidity right where it is needed.

	One side		Two sides	
Nozzles	2	4	4	8
Capacity (l/h)	3-8	6-16	6-16	12-32

Part number

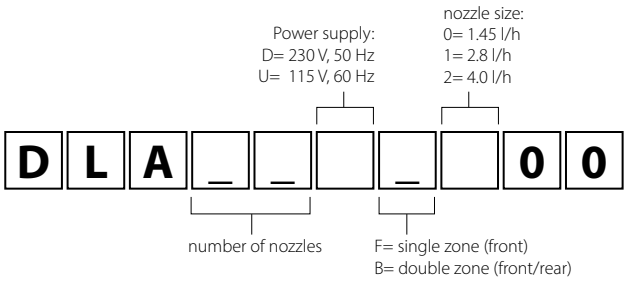

Compressed air humidifiers

Compressed air humidifiers are the ideal humidification solution whenever a compressed air supply is available, as is the case in many industrial applications, even if humidification systems are often fitted with a dedicated air compressor. The humidifier essentially consists of a cabinet fitted with electronic controller that, using two independent connection pipe networks, supplies the spray nozzles with compressed air and water at the ideal pressure for instant operating conditions.
The units can be installed inside an AHU or directly in the room where humidity needs to be controlled.
The greatest advantage of these atomisers is the minute dimensions of the droplets produced and their thorough mixing in the compressed air that, due to its speed, distributes the aerosol in the room and consequently allows quick absorption.
These units can therefore be readily used for direct cooling in rooms, and are ideal for the textile industry, wood and paper processing, and storerooms, where there is almost always a supply of compressed air.

mc multizone features an electronic controller that manages the supply of water and compressed air to the nozzles. Water atomisation is managed by an external control signal or, in the case of stand-alone control, so as to maintain the humidity/temperature set point.

The unit also manages a series of automatic cycles, such as nozzle cleaning and washing.

The system has the ability to control humidity independently in multiple zones (rooms, AHUs, cold rooms) using a master-slave layout. The layout has one master and multiple slaves (up to 5) connected in a pLAN. The master is fitted with a display for accessing the readings, viewing the status and messages on the master and slaves. The slaves have their own internal controller and can be set to continue operating even if connection to the master is interrupted.

The master/slave configuration can be used for:

- **high capacity:** applications in rooms or ducts where more than 230 kg/h of humidification is required, and thus more than one mc cabinet. The control signals (probes, external signals, limit probe) are connected to the master only. The master and the slaves generate a humidification/cooling capacity that is proportional to demand and their capacity. This allows systems to be developed with a capacity up to 1,380 kg/h;
- **multizone applications:** applications in multiple zones, rooms or ducts, each with its own humidity/temperature set point. All the parameters, status information and messages for all the cabinets can be viewed and edited from the user interface on the master.

Automatic nozzle self-cleaning system

Each cabinet, master and slave, periodically activates a cycle for drying and cleaning the atomising nozzles. A special cleaning piston inside the nozzle is periodically pressed, by a spring, into the opening of the nozzle, removing any mineral salts and considerably reducing the need for cleaning.

mc multizone

MC*

Guaranteed hygiene

mc multizone ensures a very high level of hygiene, through:

- automatic emptying of the water line whenever the unit stops;
- automatic periodical washing of the water line during inactivity.

This prevents the nozzles from spraying stagnant water. In addition, an effective UV sanitising lamp (optional) can also be installed upstream of mc multizone; this shines UV light ON the flow of supply water, helping eliminate any biological contaminants such as bacteria, viruses, mould, spores and yeast that may be in the water.

Water quality for mc multizone systems

The constructional and functional features of the mc multizone allow the use of untreated drinking water. Nonetheless, the quantity and quality of dissolved minerals affect the frequency of routine maintenance operations (periodical cleaning of the nozzles) and the quantity of mineral dust deposited by the droplets of water after these have completely evaporated. For best operation, demineralised supply water by reverse osmosis should be used. This is also specified by the main reference standards, such as UNI 8884, VDI6022 and VDI3803.

Compressor

mc multizone requires compressed air, provided by an external compressor, not supplied by CAREL. The volume of air at standard atmospheric pressure required to atomise one litre of water is 1.27 Nm^3/h, compressed to a pressure between 4 and 10 bars.

Accessories

Nozzles and assembly kits

(MCA* and MCK1AW0000)

AISI316 stainless steel nozzles are available with different capacities, however all with the same outside dimensions.

Model	Capacity
A	2.7 l/h
B	4.0 l/h
C	5.4 l/h
D	6.8 l/h
E	10 l/h

Compressed air consumption: each 1 kg/h of atomised water requires 1.27 Nm^3/h of compressed air.
Dripping is avoided thanks to the closing mechanism in periods of inactivity. The nozzle assembly kit includes the components required for assembly of a nozzle between a manifold in the water line and a manifold in the compressed air line, and is suitable for all types of mc nozzles.

Pressure sensor at the end of the line (for modulating cabinets)

(MCKPT*)

This is installed at the end of the compressed air line that supplies the nozzles. In this way, the controller can regulate air pressure to the optimum value (2.1 bars) at the nozzle that is furthest away, making up for pressure drop. This enormously simplifies setup of the installation, which will work perfectly right from the very first time.

Drain valve at the end of the line

(MCKDVWL*)

This is installed at the end of the water line that supplies the nozzles. In this way, mc multizone can empty the line when the unit is off and run the automatic periodical wash cycles. These procedures ensure a high level of hygiene by avoiding stagnated water in the line.

Pressure gauge at the end of the line (for ON/OFF cabinets)

(MCKM*)

This has the same purpose as the pressure sensor at the end of the line, described above. In this case, the pressure generated by the cabinet can be adjusted manually so as to reach a pressure of 2.1 bars on the gauge at the end of the line.
A pressure gauge is also available for displaying water pressure at the end of the line.

UV lamp disinfection system and filters

(MCKSUV0000, MCKFIL* and MCC*)

For optimum operation and to ensure maximum hygiene, a UV sanitising lamp and water filter are installed upstream of the cabinet. For the compressed air line, CAREL also provides a filter to trap any solid particles and an oil filter to remove any oil.

Compressed air filter

(MCFILAIR01)

Installed before the mc multizone cabinet, this protects the nozzles against being clogged by particles contained in the compressed air line.

Compressed air oil mist eliminator

(MCFILOIL01)
The eliminator is needed to trap any oil leaks from the compressor.

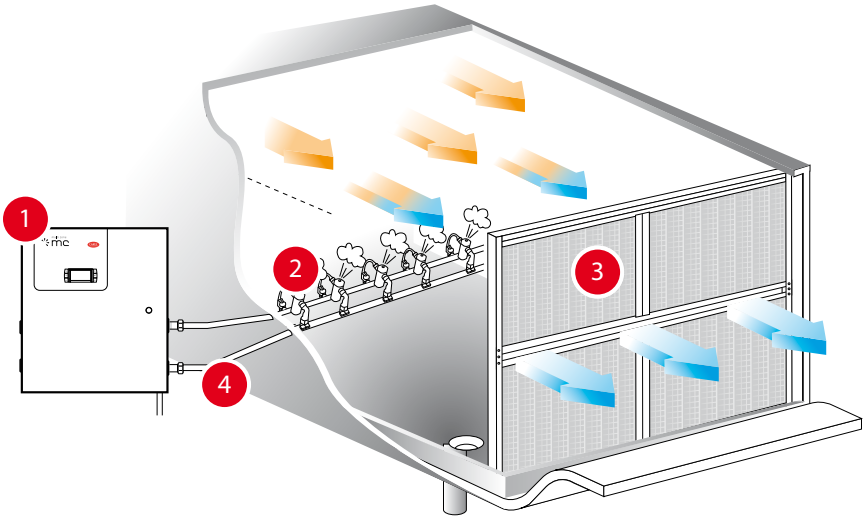

1 *Cabinet: available in various models, according to capacity, type of control (ON/OFF or modulating), type of supply water, master/slave and power supply.*

2 *Nozzles: as well as the special atomising nozzles, assembly kits are also available for installing each nozzle.*

3 *Mist eliminator: with fibreglass or AISI304 filtering mesh (the same used for humiFog) for duct installation only.*

4 *Manifolds: stainless steel manifolds are available for installation in the ducts where the atomising nozzles are installed. Manifolds and lines for installations in rooms are not supplied.*

mc multizone table

Features	MC060*	MC230*
Maximum humidification capacity - kg/h	60	230
Power supply	230 Vac single-phase, 50/60 Hz / 110 Vac single-phase 60 Hz, 37…48 W	
Operating conditions	1T40 °C, 0 to 80% RH non-condensing	
Storage conditions	-1T50 °C, 0 to 80% RH non-condensing	
Degree of protection	IP40	
Water fill		
Connection	1/2" G	1/2" G
Temperature limits - °C	1T50 °C	
Water pressure limits - MPa (bar)	0.3 to 0.7 (3 to 7)	
Instant flow-rate - l/h	60	230
Total hardness - ppm $CaCO_3$ *	0 to 400	
Conductivity limits - µS/cm *	0 to 1250	
Water drain		
Connection	TCF 8/10 or TCF 6/8 normal water model, TCF 8/10 demineralised water model	
Water outlet		
Connection	1/2" G	
Water pressure - MPa (bar)	0.035 + 0.01Δh - 0.35 + 0.1 Δh (Δh: height difference in metres between cabinet and nozzles)	
Air line		
Connection	1/2" G	
Temperature limits - °C	1T50 °C	
Water pressure limits - MPa (bar)	0.5 to 0.7 - 5 to 7	
Outlet	1/2" G	
Air pressure - MPa (bar)	0.12 to 0.21 - 1.2 to 2.1 (intermediate pressure values available only on modulating versions)	
Nozzles		
Material	stainless steel (AISI 316)	
Nozzle capacity at 2.1 bars - kg/h	2.7 - 4.0 - 5.4 - 6.8 - 10	
Network		
Network connection	Modbus®, LON, TCP/IP, SNMP	

(*) The mc system can operate on untreated drinking water. Nonetheless, the quantity and the quality of dissolved minerals affect the frequency of routine maintenance operations (periodical cleaning of the nozzles) and the quantity of mineral dust deposited by the droplets of water after these have completely evaporated. For best operation, demineralised supply water by reverse osmosis should be used. Softened water, on the other hand, should not be used as it does not reduce the concentration of mineral salts. In any case, observe the provisions of the UNI8884 standard "Characteristics and treatment of the water in cooling and humidification circuits", according to which the main water characteristics are conductivity < 100 µS/cm and total hardness <5 °fH (50 ppm CaCO3). Similar recommendations are also provided by VDI6022 and VDI3803.

Dimensions in mm (in) and weights in kg (lb)

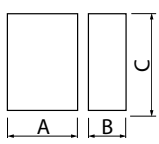

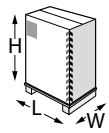

Model	AxBxC	weight	LxWxH	weight
MC*	515x165x580 (20.3x6.5x22.8)	19.5 (43)	605x255x770 (23.8x10x30.3)	21 (46.3)

Part number

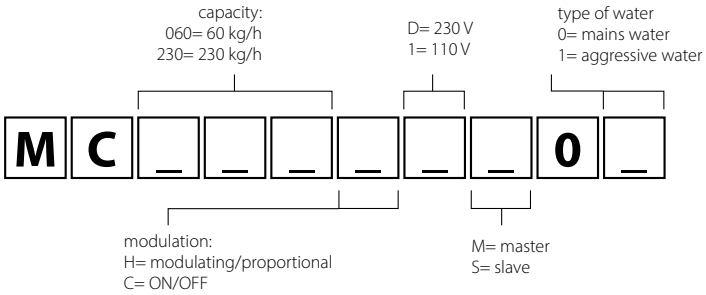

OVERVIEW DRAWING mc multizone

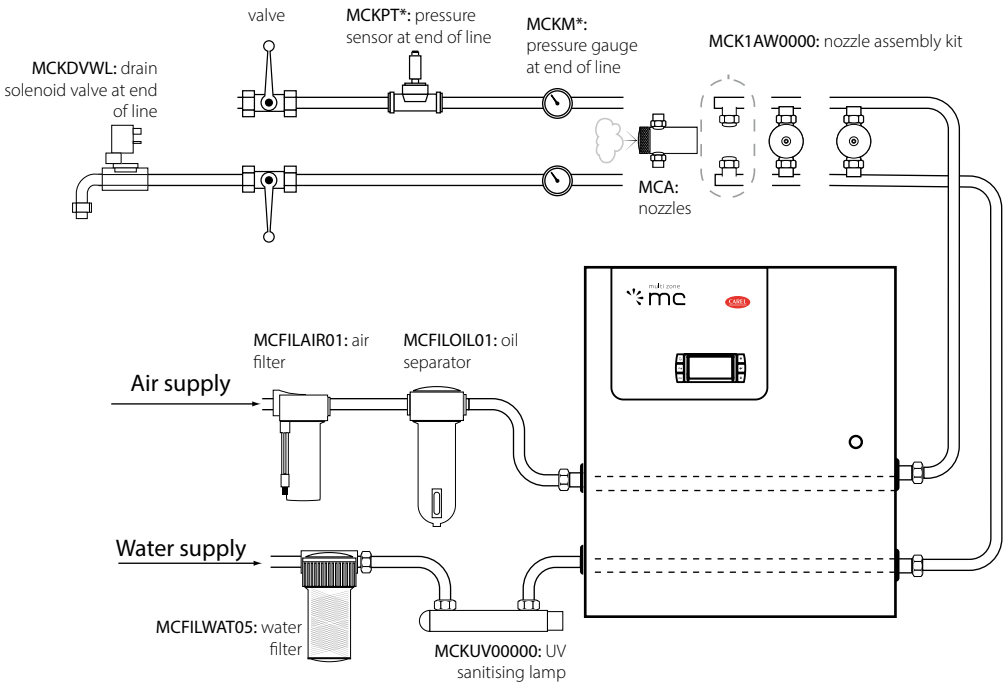

Probes

DPP*: temperature and humidity probe for industrial environments

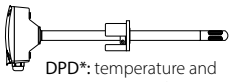

DPD*: temperature and humidity probe for ducts

Ultrasonic humidifiers

Ultrasonic humidifiers comprise a small water storage tank and piezoelectric transducers installed at the bottom of the tank.
The surface of the transducer vibrates at very high speed (1.65 million times a second), a speed that does not allow the water to move due to its inertial mass (the water cannot respond to the extremely fast movements of the transducer).
During the negative amplitude of the transducer cycle, a void is created that is not filled by the water, being unable to follow the extremely movements of the transducer. The cavity thus created leads to the production of bubbles that are pushed to the edge of the water column during the positive amplitude of the cycle, thus colliding. During this process, very fine particles of water are atomised.

Ultrasound technology applied to air humidification is an efficient and versatile solution:

- efficient, as ultrasonic humidifiers guarantee considerable energy savings (>90%) when compared to ordinary steam generators;
- versatile, thanks to the size of the droplets produced (diameter of 0.001 mm). This fundamental characteristic guarantees very fast absorption of the atomised water in the surrounding environment, avoiding possible condensation.

humiSonic is the CAREL ultrasonic humidifier. It has been designed to control and maintain the required humidity level in the specific environment. The features of humiSonic make it suitable for many different types of applications:

- residential comfort, for direct humidification applications in rooms or installation in ducts or on fan coils;
- datacenters, thanks to the very fine droplets generated, the humidifier is suitable for cooling and humidifying the surrounding environment;
- cleanrooms, to ensure constant humidity during production processes;
- museums, to preserve works of art, maintaining the right humidity and temperature;
- cold stores and climate rooms, for storing food;
- display cabinets, to preserve the freshness of fruit, vegetables and fresh food for sale;
- food processing, installed on appliances such as dough retarders;
- tobacco and wine industries, for product storage.

Benefits

- significant energy savings;
- easy installation and maintenance;
- guaranteed hygiene;
- precise control of room humidity;
- connection to external controllers;
- communication via Modbus and CAREL protocols.

humiSonic compact

UU*

humiSonic, installed on fan coils, is the ideal solution for coupling accurate control of ambient humidity with common temperature control (guaranteed by the fan coils).
At the same time, the humidifier is suitable for installation on showcases and display cabinets, to preserve the freshness of food, and on dough retarders, in production processes that require the right humidity and temperature.

Complete solution

As humiSonic is fitted with an integrated control board, no external electric control board is required. The humidifier receives the power supply from the transducer (supplied complete with cable kit) while as a control signal it can be connected to a voltage-free contact (ON/OFF), can be managed by the dedicated micro probe (available as an accessory) or can be controlled via serial network with Modbus® or CAREL communication protocol.
By installing an optional card, humiSonic can be managed with an external signal (e.g. 0 to 10 V, 4 to 20 mA…) or with other active probe models.

Easy installation and maintenance

humiSonic, thanks to its compact design, can be easily installed on humidity and temperature control appliances and the latest-generation fan coils, and at the same time can be retrofitted on existing units. The maintenance of humiSonic consists only in periodic replacement of the transducers and, thanks to the ergonomic design, this does not have to be performed by trained staff.

Supply water

humiSonic works operates on demineralised or mains water. If using mains water, maintenance intervals for cleaning or replacing the transducers will be shorter, the higher the mineral salt content of the supply water.

Energy saving

Ultrasound humidification is adiabatic, requires very low power consumption compared to steam solutions (40 W to atomise 0.5 kg/h of water). This important feature makes humiSonic compact an "Energy Saving" solution in line with modern energy saving expectations.

Hygiene

This is one of the main strong points of humiSonic and is guaranteed by three important characteristics:

- the washing cycles are performed periodically (even when humiSonic is in standby), preventing the build-up of dirt inside the tank;
- the drain valve ensures the humidifier empties completely once the humidification cycle has ended, also in the event of a power failure;
- the tank (made from plastic) also features silver ions, which are able to prevent proliferation of bacteria.

Dimensions in mm (in) and weights in kg (lb)

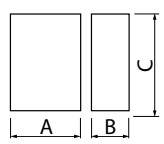

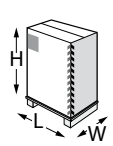

Mod.	AxBxC	weight	LxWxH	weight
UU01F*	125x121x221 (4.92x4.76x8.70)	2,8 (6.17)	395x155x225 (15.6x6.1x8.9)	3,9 (8.6)
UU01G*	125x183x216 (4.92x7.2x8.5)	4,4 (9.7)	395x155x225 (15.6x6.1x8.9)	5,5 (12.3)

Part number

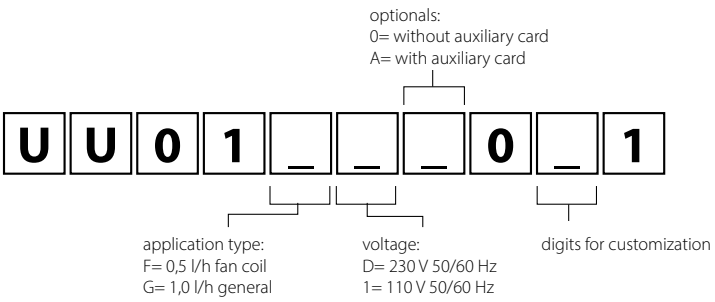

humiSonic compact table

Features	UU01F*	UU01G*
Atomised water production - kg/h (lb/h)	0.5 (1.1)	1.0 (2.2)
Atomised water outlet - Ø mm	Ø= 40	
Supply water inlet	G 1/8" F	
Supply water temperature - °C (°F)	from 1 to 40 (from 33.8 to 104)	
Supply water pressure - bar (psi)	from 0.1 to 4 (from 14.5 to 58)	
Fill flow rate - l/min	0,6	
Supply water	The use of demineralised water is recommended (humiSonic will still work correctly on mains water, nonetheless routine maintenance will be required more frequently).	
Drain water outlet - Ø mm	Ø= 10	
Max. drain flow-rate - l/min	1	
Power	230 V, 60 W; 115 V, 60 W	230 V, 110 W; 115 V, 110 W
Power supply voltage	230 V, 50/60 Hz or 115 V, 50/60 Hz	
Electric current	230 V, 0.75 A; 115 V, 0.6 A	230 V, 1.5 A; 115 V, 1.2 A
Power cable size - mm²	1,5	
Control signals		
ON/OFF enabling	●	●
HYHU000000 humidity probe (to be installed in the fan coil intake line)	☐	☐
UUKTA00000 flow sensor to be connected to the neutral wire of the fan coil power supply.	☐	☐
RS485 Serial (CAREL or Modbus® protocol).	●	●
Signal from active probe	only with UUKAX auxiliary card or on models with card already fitted in the factory	
External control signals (0 to 10 V, 4 to 20 mA)		

● standard
☐ optional

OVERVIEW DRAWING humiSonic

fan coil installation

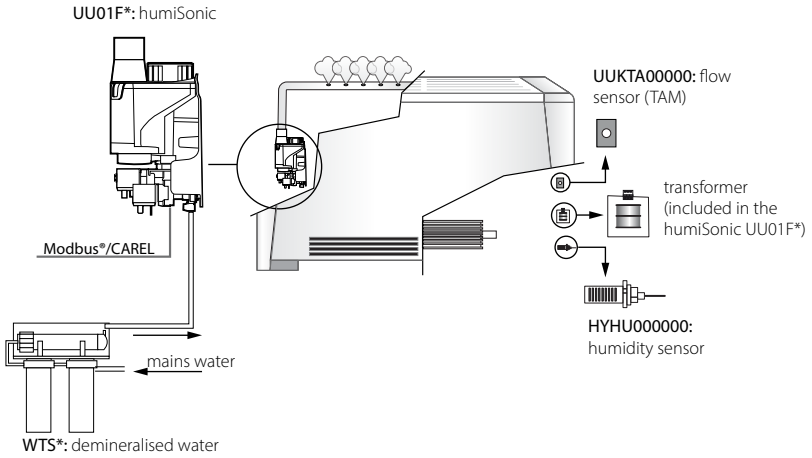

display cabinet installation

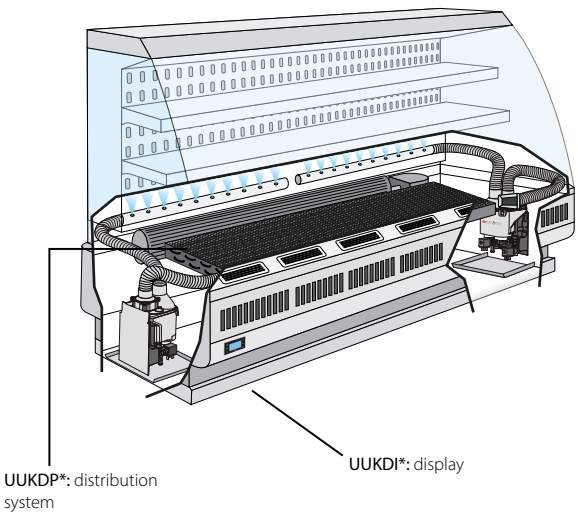

humiSonic direct

UU*

humiSonic direct, installed directly in the room, can precisely control air relative humidity.

Complete and compact solution

In room humidity control applications, it is crucial for the humidifier to have compact dimensions.

The solution in fact needs to adapt to an existing layout, while allowing flexibility for future changes in position.

humiSonic is a stand-alone compact solution that comprises both the control panel/power supply and the probe for reading air humidity.

Energy saving

Very low energy consumption (less than 80 W per litre of atomised water) makes humiSonic the ideal solution for datacentres and all humidity control applications where energy saving is crucial.

In datacenters in particular, humiSonic can be installed in the hot aisle and, integrating with the close control unit thanks to Modbus communication, can precisely control air humidity.

Mission Critical DNA

When supplying humiSonic with desalinated water, the interval for replacing the piezoelectric transducers is 10,000 hours!

In addition, if combined with a high-precision probe (not supplied), humiSonic direct can achieve an accuracy of ±1% RH, and at the same time use the built-in probe as a humidity limit probe.

Dimensions in mm (in) and weights in kg (lb)

Mod.	AxBxC	weight	LxWxH	weight
UU02R*	275x274x317 (10.8x10.79x12.48)	9.5 (20.9)	635x410x410 (25x16.14x16.14)	11 (24.2)
UU04R*	400x274x317 (15.7x10.79x12.48)	12.5 (27.6)	760x410x410 (29.92x16.14x16.14)	14 (30.9)
UU06R*	525x274x317 (20.7x10.79x12.48)	15.5 (34.2)	885x410x410 (34.84x16.14x16.14)	17 (27.5)
UU08R*	650x274x317 (25.6x10.79x12.48)	18.5 (40.8)	1010x410x410 (39.76x16.14x16.14)	21 (46.3)

Part number

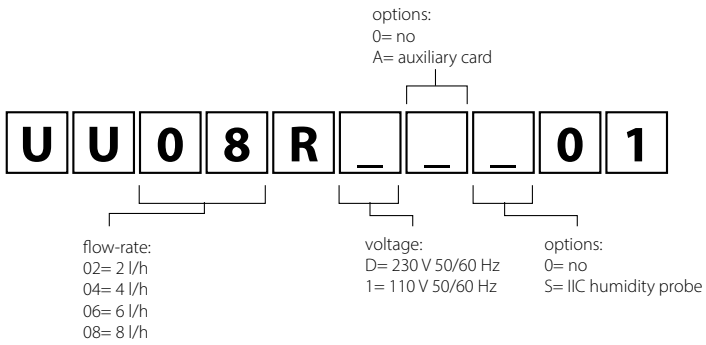

humiSonic direct table

Features	UU02R*	UU04R*	UU06R*	UU08R*
Atomised water production - kg/h (lb/h)	2 (4.4)	4 (8.8)	6 (13.2)	8 (17.6)
Atomised water outlet - Ø mm	40			
Supply water inlet - mm	OD= 8 (5/6", ID= 6 (15/64")			
Supply water temperature - °C (°F)	1 to 40°C (33.8 to 104)			
Supply water pressure - bar (psi)	1 to 6 (14.5 to 87)			
Fill flow rate - l/min	0.6			
Feedwater - µS/cm	3 to 80			
Drain water outlet - Ø mm	OD= 8 (5/6", ID= 6 (15/64")			
Max. drain flow-rate - l/min	1.9			
Power - W	180	330	480	690
Power supply voltage	230 V, 50/60 Hz; 110 V, 50/60 Hz			
Electric current - A	0.8/1.65	1.5/3.0	2.1/4.4	3.0/6.3
Power cable size - mm^2	0.823			
Control signals				
Enable ON/OFF	●	●	●	●
HYHU000000 humidity probe	□	□	□	□
RS485 serial (CAREL or Modbus® protocol)	●	●	●	●
Signal from active probe or external control signals (0 to 10 V, 4 to 20 mA)	only with UUKAX auxiliary card or on models with card already fitted in the factory			

● standard
□ optional

OVERVIEW DRAWING humiSonic

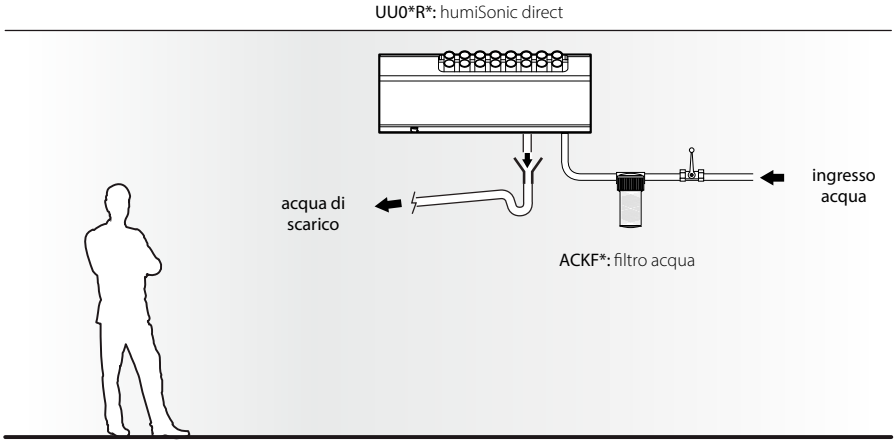

humiSonic ventilation

UU*

The humiSonic version for air handling units provides adiabatic humidification even in compact-sized ducts.
Installed directly in the air stream, humiSonic atomises water into very fine droplets (1 µm), which are instantly absorbed.

Hygiene

This new generation of ultrasonic humidifiers incorporates all of Carel's experience in ensuring maximum hygiene: all components in contact with the demineralised water are made from stainless steel, and the main body is designed to prevent stagnation of water at the end of the humidification cycle. Moreover, the electronic controller manages periodical washing cycles in the event of system inactivity.

High efficiency

humiSonic, with power consumption of less than 80 W for each litre of atomised water, is the optimum choice for applications where energy saving is a priority.
In addition, thanks to the small droplet size, around 1 µm, the atomised water is completely absorbed by the air stream in just 50-60 cm.

Easy installation and maintenance

humiSonic for air handling units comprises two elements: the main body (containing the piezoelectric transducers) and the electrical power supply and control panel.
The main body can be easily positioned inside the air handling unit, while the electrical panel can be installed outside of the humidification compartment.

Electrical panel

UQ*

The ultrasonic humidifiers installed inside air handling units are powered and controlled by an electrical panel, complete with display.

Dimensions in mm (in) and weights in kg (lb)

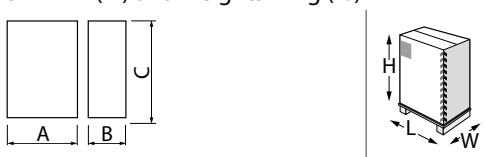

Mod.	AxBxC	weight	LxWxH	weight
UU02D*	275x256x309 (10.8x10.1x12.2)	4.9 (10.8)	510x410x410 (20.07x16.14x16.14)	5.9 (13)
UU05D*	400x256x309 (15.7x10.1x12.2)	6.4 (14.1)	640x410x410 (25.20x16.14x16.14)	7.4 (16.3)
UU07D*	525x256x309 (20.7x10.1x12.2)	8 (17.6)	760x410x410 (29.92x16.14x16.14)	9.5 (20.9)
UU09D*	650x256x309 (25.6x10.1x12.2)	9.5 (20.9)	890x410x410 (35.04x16.14x16.14)	11 (24.2)
UU14D*	900x256x309 (35.4x10.1x12.2)	12.7 (28)	1150x410x410 (45.27x16.14x16.14)	14.7 (32.4)
UU18D*	1150x256x309 (45.3x10.1x12.2)	15.8 (34.8)	1350x410x410 (53.15x16.14x16.14)	17.8 (39.2)

Part number

U U _ _ D D 0 0 0 0

flow-rate:
02= 2,4 l/h
05= 4,8 l/h
07= 7,2 l/h
09= 9,6 l/h
14= 14,4 l/h
18= 18 l/h

humiSonic ventilation table

Features	UU02D*	UU05D*	UU07D*	UU09D*	UU14D*	UU18D*
Atomised water production - kg/h (lb/h)	2,4 (5.3)	4,8 (10.5)	7,2 (16)	9,6 (21)	14 (31)	18 (39.6)
Atomised water outlet - Ø mm	Ø= 40					
Supply water inlet - mm	OD= 8 (5/6", ID= 6 (15/64")					
Supply water temperature - °C (°F)	1 to 40 (33.8 to 104)					
Supply water pressure - bar (psi)	0.1 to 6 (14.5 to 87)					
Fill flow rate - l/min	0.6					
Feedwater - µS/cm	3 to 80					
Drain water outlet - mm	OD= 8 (5/6", ID= 6 (15/64")					
Max. drain flow-rate - l/min	1.9					
Power - W	210	350	500	650	950	1150
Power supply voltage	230 V, 50/60 Hz; 110 V, 50/60 Hz					
Electric current - A	0.7/1.5	1.3/2.7	2.0/4.0	2.6/5.5	4.0/8.2	4.7/10
Power cable size - mm^2	0.823					
Control signals						
Enable ON/OFF	●	●	●	●	●	●
RS485 serial (CAREL or Modbus® protocol)	□	□	□	□	□	□
Signal from active probe - V	0 to 10, 0 to 5					
External control signals - V						

● standard
□ optional

OVERVIEW DRAWING humiSonic

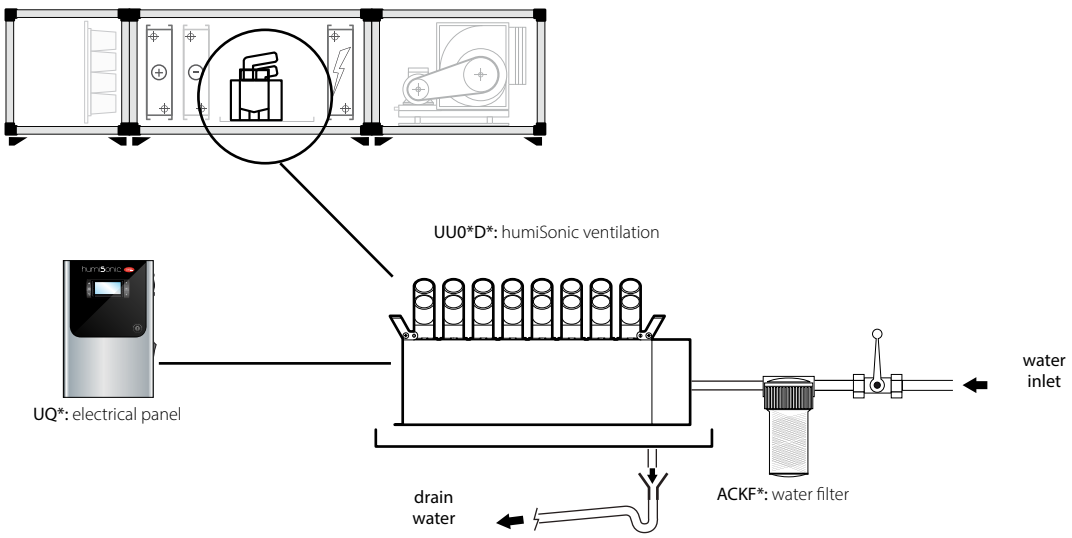

Accessories

☑ compact
☐ direct
☐ ventilation

Air filter

UUKFL* + UUKCY*

To ensure the inside of the tank remains clean, especially in dusty environments, an air filter can be installed on the fan inlet, which can be easily removed for cleaning with water.

☑ compact
☑ direct
☐ ventilation

Temperature/humidity probe

DPW*

Via the auxiliary card (UUKAX00000, optional but always recommended), humiSonic can read an active room temperature/humidity probe, ideal for installations in places such as museums, libraries and offices, where design also plays an important role.

☐ compact
☑ direct
☐ ventilation

Flood detector

FLOE*

The flood detecting device is able to sense the presence of water in an environment. It is generally used to protect against flooding in datacenters, offices, laboratories and other special environments.

☑ compact
☐ direct
☐ ventilation

Distribution system

UUKDP*

The distribution systems offered as an accessory allow easy and safe installation. The kits are made up of a part in flexible plastic measuring 700 mm in length (to be connected to the humiSonic manifold) and a part in stainless steel to be installed in the room, available in lengths: 250, 530, 600 and 800 mm.

☑ compact
☑ direct
☐ ventilation

Dedicated humidity probe

HYHU000000

humiSonic compares the ambient humidity value (read by the probe, built-in on some models) against the set point, and consequently modulates atomised water production in order to control the ambient conditions. Alternatively, humiSonic can be controlled via an external signal/RS485 or external active probe, and use the built-in probe as a humidity limit probe.

☐ compact
☑ direct
☑ ventilation

WTS compact

ROC*

The new CAREL reverse osmosis system has been designed for treating humidifier feedwater.
Supplied with drinking water, the unit produces demineralised water whose physical/chemical, flow-rate and pressure characteristics are ideal for providing humidifier feedwater.

☑ compact
☐ direct
☐ ventilation

Flow sensor

UUKTA00000

The flow sensor manages the important remote ON/OFF function, and must be connected to the neutral wire on the power supply to the fan on the fan coil or in the AHU or display cabinet. By measuring the flow of current, the flow sensor (TAM) will enable or disable atomised water production.

☑ compact
☑ direct
☐ ventilation

Display and optional card

UUKDI00000, UUKAX00000

With the optional card, humiSonic can be connected to the display; in this way, access is available to the list of parameters in order to optimise the configuration of humiSonic and adapt it to particular application requirements.

☐ compact
☐ direct
☑ ventilation

Temperature probe for verifying preheating

NTC*

In order to prevent water wastage, an NTC temperature probe can be enabled in the UQ* electrical panel: if the air temperature upstream of humiSonic falls below the design set point, the production of atomised water it will be automatically modulated, until stopping below a certain threshold.

Centrifugal humidifiers

humiDisk is a small yet sturdy humidifier that uses a spinning disk to atomise water and transform it into millions of very small droplets that, blown by a built-in fan, are introduced into the environment, where they evaporate, humidifying and cooling the air.

Very low power consumption

humiDisk is a simple, economic and easy to maintain humidification system, with an energy consumption of just 220 W for 6.5 kg/h of capacity (31 W for the 1.0 kg/h model).

Guaranteed hygiene

The water tank inside the humiDisk contains just 0.055 litres of water, which is atomised, at maximum capacity, in just 30s for the 6.5 kg/h model and 3 minutes for the 1 kg/h model. The water in the tank is therefore changed very rapidly, meaning the humidifier substantially works with non-stagnant running water, so as to guarantee the best hygiene conditions.

Adjustable capacity (humiDisk$_{65}$ only)

Operation of humiDisk$_{65}$ controlled by an electronic board fitted with a trimmer for setting humidifier capacity, from 1.1 to 6.5 kg/h, making it suitable for all applications.

Automatic washing cycles (humiDisk$_{65}$ only)

The board, as well as managing normal unit operation, also performs a tank washing cycle when starting the unit, and an emptying cycle when humidification is no longer required. This avoids having stagnant water inside the unit.

Important: to ensure a higher level of hygiene, when using the CAREL electrical control panels, the humidifier also washes the water tank at the start of each humidification cycle.

Water used

humiDisk can operate on both mains water or treated water. The quantity and quality of the minerals dissolved in the water affect the frequency of the routine maintenance operations and the amount of dust generated. For best operation, use demineralised water (do not use softened water, as this does not reduce the content of minerals dissolved in the water).
In any case, observe the requirements of UNI8884 standard "Characteristics and treatment of the water in cooling and humidification circuits", according to which the main characteristics of the water are conductivity < 100 µS/cm and total hardness <5 °fH (50 ppm CaCO3). Similar requirements are also specified in standards VDI6022, VDI3803.

Benefits

- Simplicity:
  - requires just the 230 Vac power supply and the mains water and drain lines;
  - operation is ON/OFF;
- hygienically safe:
  - very small water tank, just 55 ml;
  - washing procedure at unit start;
  - emptying at the end of the humidification cycle;
  - washing procedure at the beginning of every cycle (with CAREL control panel only);
- modularity: 1 or 2 humiDisk$_{65}$ units can be controlled in parallel using the special control panel, or up to 10 humiDisk10 units using the CAREL humidistat

humiDisk$_{10}$ & humiDisk$_{65}$

UC*

Applications

- cold rooms, storage facilities and ripening rooms for products, such as fruit and vegetables, where low humidity level causes weight loss and product spoilage;
- printing facilities, where the correct level of humidity must be maintained to avoid variation in paper size and consequent misprints; the correct humidity value reduces the probability of electrostatic discharges and adhesion of the sheets of paper;
- textile industries, where maintenance of the required humidity according to the production process and the type of material used is fundamental.

Assembly and accessories

humiDisk$_{65}$ is complete with accessories for wall and ceiling mounting, as well as the water fill and drain hoses.

humiDisk$_{10}$ is available in two versions:

- with accessories for ceiling installation only;
- also complete with wall-mounting bracket and water fill and drain hoses.

Accessories

Ultracella

(WB000*)

The CAREL platform can connect more probes and loads than other standard solutions, managing these with optimised and advanced control algorithms, for total cold room control. With UltraCella, humidity control can also be optimised, for even better food storage inside the cold room. HACCP compliant.

Electrical panels with electronic humidity controller

(UCQ065D*00)

CAREL supplies electrical panels fitted with electronic humidity controller. By connecting a humidity probe to the controller, this can activate one or two humiDisk$_{65}$, units, in parallel, so as to maintain the humidity level to the set value. The humidity measured by the probe can be read on the display of the controller. The humidity probe is not included in the electrical panel.

UV lamp disinfection system

(MCKSUV0000)

To guarantee maximum hygiene, a UV sanitising lamp can be installed upstream of the humidifier. The lamp shines UV light on the flow of supply water, helping to eliminate any biological contaminants that may be present, such as bacteria, viruses, mould, spores and yeast.

Frost protection device (humiDisk$_{65}$ only)

(UCKH70W000)

humiDisk$_{65}$ can be supplied with an optional frost protection device: an electric immersion heater, controlled by the electronic board and a temperature sensor that is activated when the temperature inside the unit approaches 0 °C. The appliance can operate at temperatures down to around 1 °C without the frost protection device, and down to -2 °C with the device (optional). This is especially useful for applications in fruit and vegetable cold stores.

Humidistat

(UCHUMM0000)

This simple and low-cost mechanical humidistat can be connected directly to one or more humiDisk units (up to a maximum of 10 units in parallel, for humiDisk$_{10}$ or one humiDisk$_{65}$). Used to set the desired humidity by simply turning the knob.

humiDisk table

Features	humiDisk$_{10}$	humiDisk$_{65}$
Capacity	1 kg/h at 230 V 50 Hz1.2 kg/h at 110 V 60 Hz	6.5 kg/h, adjustable from 0.85 to 6.5 kg/h
Power supply	230 V, 50 Hz - 110 V, 60 Hz	230 V, 50 Hz - 110 V, 60 Hz
Power consumption - W	31	230 - (290 with frost protection device)
Air flow-rate - m³/h	80 (47 CFM)	280 (165 CFM)
Water content - l	0.055	0.055
Operating conditions - °C (°F)	1T35 (34T95)	1T35 (34T95) WITHOUT frost protection device
		-2T35 °C WITH frost protection device (not available for American version)
	0 to 100% RH non-condensing	0 to 100% RH non-condensing
Frost protection heater	no	yes (European version only)
Degree of protection	IPX4	IPX4
Electronic board for capacity control		●
Electrical panel with electronic humidistat		☐
Mechanical humidistat	☐	☐
Installation accessories	accessories for ceiling-hung installation INCLUDED. Accessories for wall mounting and hoses NOT INCLUDED, available as options.	accessories for ceiling-hung AND wall-mounted installation and fill and drain hoses included.
Certification	CE and ETL	CE and ETL
Fill connections	Ø10 mm (OD)	3/4 G
Drain connection	Ø10 mm (OD)	3/4 G
Water		
Supply water pressure - kPa	100 to 1000	100 to 1000
Water temperature limits - °C (°F)	1T50 (33.8T122)	1T50 (33.8T122)
Water total hardness limits (*) (**)	max 30 °FH (max. 300 ppm $CaCO_3$)	max 30 °FH (max. 300 ppm $CaCO_3$)
Water conductivity limits (**) - µS/cm	100 to 1200	100 to 1200

(*) not less than 200% Cl- in mg/l
(**) The quantity and quality of the minerals dissolved in the water affect the frequency of the routine maintenance operations and the amount of dust generated. For best operation, use demineralised water (do not use softened water, as this does not reduce the content of minerals dissolved in the water). Observe the requirements of UNI8884 standard "Characteristics and treatment of the water in cooling and humidification circuits", according to which the main characteristics of the water are conductivity < 100 µS/cm and total hardness <5 °fH (50 ppm CaCO3).

● standard
☐ optional

Dimensions in mm (in) and weights in kg (lb)

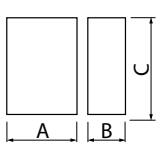

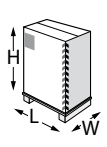

Model	AxBxC	weight	LxWxH	weight
UC010	302x390x312 (11.89x15.35x12.28)	4.3 (9.48)	400x400x350 (15.75x15.75x13.78)	5 (11.02)
UC065	505x610x565 19.88x24.01x22.24)	17.6 (38.80)	640x600x665 25.20x23.62x26.18)	20 (22.24)

Positioning

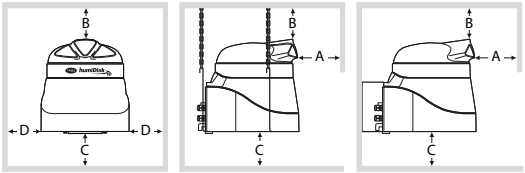

humidifier	distance (m)			
	A	B	C	D
UC010	≥2	≥0,5	≥1,5	≥0,5
UC065	≥3	≥1	≥1,5	≥0,5

Part number

type of heater:
0= without heater
1= with heater
k= without heater, with brackets

U	C	0	1	0	0	_	_	_	0

supply voltage:
1= 110 V
D= 230 V

supply frequency:
0= 50 Hz
6= 60 Hz

OVERVIEW DRAWING humiDisk10

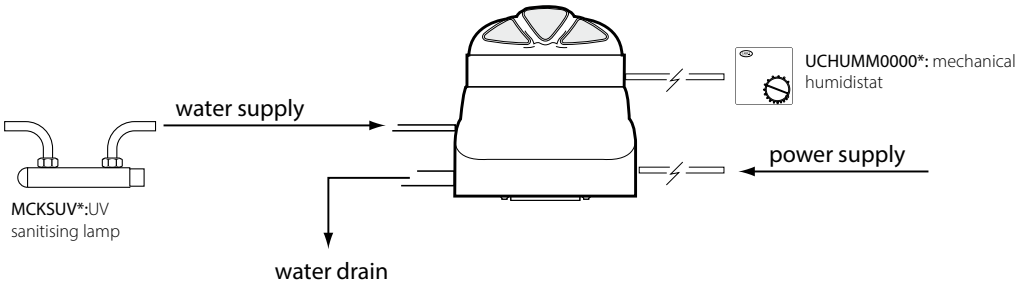

Part number

type of heater:
0= without heater
1= with heater
k= without heater, with brackets

U	C	0	6	5	0	_	_	_	0

supply voltage:
1= 110 V
D= 230 V

supply frequency:
0= 50 Hz
6= 60 Hz

OVERVIEW DRAWING humiDisk65

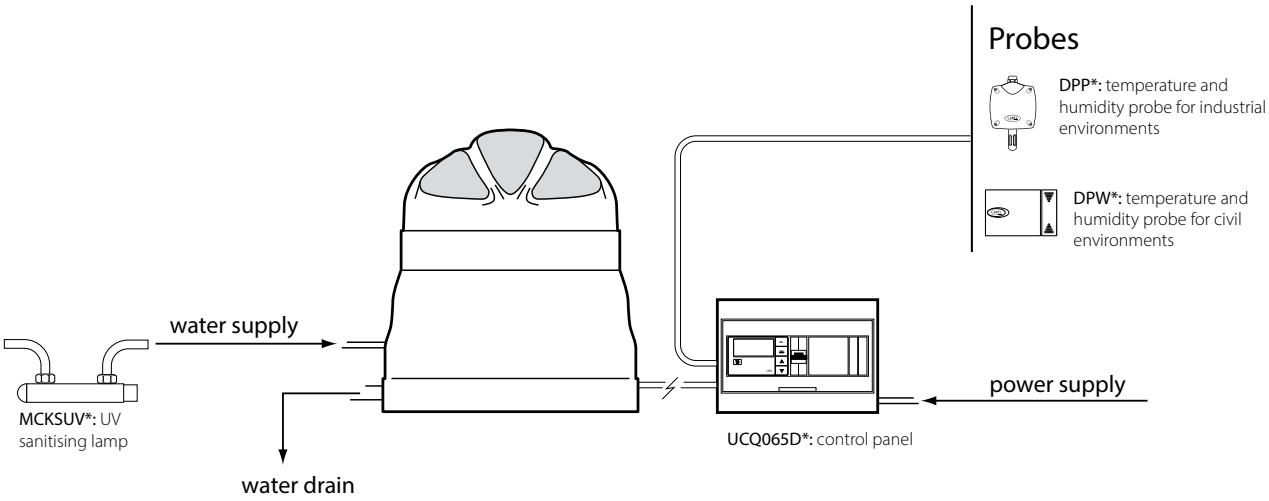

Atomisers - evaporative cooling

"Evaporative Cooling" is the process in which water cools the air through evaporation. For this to happen spontaneously, without the contribution of external energy, the water must be atomised in the air as very fine water droplets which, having a lower surface tension than the surrounding air, evaporate into the air.
However, the evaporation of water requires a certain amount of energy. This is taken from the air itself, which, to absorb the water, yields sensible heat, thus lowering its temperature. Every kilogram of water that evaporates absorbs 0.69 kW of heat from the air. This is how the dual humidification and cooling effect of the air is obtained through the Evaporative Cooling process, which in many air handling applications represent two desired effects.

Atomisers

CAREL supplies a complete range of products that make use of the principles of evaporative cooling and all its advantages. The standard composition of these products is:

- cabinet, containing the pump for pressurising the water, an inverter and an electronic controller for modulating the production of atomised water instant by instant;
- atomiser nozzles, able to atomise the water into very fine water droplets (in the order of a few hundredths of a millimetre), extending the heat exchange surfaces;
- distribution system, composed of stainless steel manifolds, atomiser nozzles and drain valves, in order to guarantee emptying.

Benefits

- **energy saving:** adiabatic humidification and evaporative cooling combined in one single system, providing a global energy-saving solution. The only energy needed is to pressurise the water delivered to the spray nozzles by a pump. Power consumption is around 4-8 W for each l/h of atomised water;
- **minimum pressure drop**: evaporative cooling guarantees real energy savings, assuring a very low pressure drop at the fans (30 Pa);
- **controlled atomisation:** combining the action of the inverter and modulation circuits allows a precise response to temperature and humidity demand. Accurate control of the amount of atomised water fully exploits the evaporative effect, avoiding waste.

optiMist

EC**

optiMist is a humidifier and evaporative cooler that uses a vane pump to pressurise the water and subsequently atomise it through special nozzles.

optiMist is a complete system, which in one solution provides both humidification and evaporative cooling and which can be used in an AHU (air handling unit) to both humidify the supply air (direct evaporative cooling) and indirectly cool the return air, for example using a cross-flow heat recovery unit.

System components

- pumping station that pressurises the water (4 to 15 bars): this also contains the electronic controller that completely manages the pumping station, controlling the temperature/humidity in each optiMist section. The sophisticated control system combines the action of an inverter, which controls the pump speed and therefore flow-rate, with two solenoid valves that only activate the nozzles that are needed, meaning the system always works at the optimal pressure for atomising the water;
- distribution system: this is made up of stainless steel piping, fittings for compression joints, atomiser nozzles and drain valves (autonomous mechanical valves or solenoid valves managed by the controller). optiMist can be combined with a double-circuit modulating distribution system to increase the precision of temperature or humidity control. Alternatively, combined with two distribution systems, it becomes an integrated solution for the management of both humidification and indirect evaporative cooling (with just one pumping station and without additional electrical panels);
- droplet separator: needed to avoid wetting the humidification or evaporative cooling sections. The drainage structure simplifies droplet separator maintenance; as the filter modules can be removed from the front, without needing to dismantle the structure.

Hygiene

All CAREL atomisers are designed following the VDI6022 standard guidelines. In particular, for the products that make use of evaporative cooling, the sophisticated electronic system that governs the distribution line drain solenoid valves prevents stagnating water from stopping in the piping; a main danger for the proliferation of bacteria.
Furthermore, the distribution lines are automatically washed at set time intervals.
The UV lamp option guarantees further disinfection of the incoming water, while further treatments are available to improve the hygiene of the feedwater.

Supply water

Following the evaporation process, the mineral salts dissolved in the feedwater will partially accumulate in the nozzles, on the droplet separator and on the inside surfaces of the AHU in general. The nature and quantity of the mineral salts contained in the water determine the frequency of routine maintenance operations necessary to remove said deposits from inside the AHU.
In order to maintain the hygiene of the installation and to reduce system management costs, CAREL recommends to supply optiMist with demineralised water via reverse osmosis, as envisioned in the main standards such as UNI 8884, which require:

- conductivity <100 µS/cm;
- total hardness <5 °fH (50 ppm $CaCO_3$);
- 6.5<pH< 8.5;
- chlorides content <20 mg/l;
- silica content <5 mg/l;

If demineralised water is not available, softened water can be used. In this case, in order to limit aggressiveness, it is recommended to guarantee minimum hardness not lower than 3 °fH.
CAREL recommends the use of mains water only if this has hardness lower than 16 °fH or conductivity lower than 400 µS/cm. The use of mains water will lead to routine maintenance operations (cleaning or replacement of the nozzles and the droplet separator), whose frequency depends on the chemical composition of the water itself.

Accessories and options

Drain solenoid valves
(ECKD*)

This is installed in the distribution system drain circuit in order to allow complete emptying. Thanks to these valves, , electrically controlled by the optiMist cabinet, periodic washing cycles can be planned automatically. These are very important for guaranteeing system hygiene.

Liquid Teflon
(5024612AXX)

Liquid Teflon for high-pressure water fittings, 100 ml pack.
This is used to seal the nozzles and all the fittings on the rack and the blowers pre-assembled by CAREL.

Drop separator for AHU/duct
(UAKDS*, ECDS*)

The droplet separator has the purpose of capturing the droplets of water that have not completely evaporated to prevent them passing beyond the evaporative humidification/cooling section. It is supplied in easy-to-assemble modular panels to cover the cross-section of the AHU.
The pressure drop of the droplet separator is very low, only 30 Pa with air speed of 3.0 m/s. The support structure of the droplet separator is always in stainless steel and guarantees quick and efficient draining of the water.
The droplet separator can be supplied with glass fibre or stainless steel modules according to application requirements.

Flexible hose
(ACKT*)

AISI304 stainless steel flexible corrugated hoses for connection of the pumping station to the distribution system. Hoses available up to 10 m long.

Differential pressure switch
DCPD0*0*00

Device for controlling the differential pressure of the air for the droplet separator. The differential pressure switch allows continuous monitoring of pressure drop, signalling when this exceeds the threshold at which maintenance is recommended.

Active temperature and humidity probes
(DPD*)

The connectivity features guaranteed by the controller installed on the unit include the reading up to 4 active probes per duct (2 probes for DEC/IEC + 2 limit probes).

optiMist table

Features	EC005*	EC010*	EC020*	EC040*	EC080*	EC100*
General						
Power supply	EC*0= 230 V, 1 phase, 50 Hz EC*U= 230 V, 1 phase, 60 Hz					
Power consumption (at 50 Hz)	0,275 kW	0,275 kW	0,475 kW	0,475 kW	0,75 kW	
Current	1,2 A	1,5 A	1,6 A	2,3 A	3.0 A	3.2 A
Operating conditions - °C (°F)	5 to 40 (34 to 104) <80% R.H. non condensing					
Water supply						
maximum flow rate	50	100	200	400	800	1000
inlet pressure - Mpa; Bar; Psi	0.2 to 0.7 mPa					
connection:	EC*0= G3/4" f EC*U= NPT 3/4" f					
Water drain						
connection	stainless steel coupling G3/4f ID, OD ~35 mm/ 1.18 inch.					

Dimensions in mm (in) and weights in kg (lb)

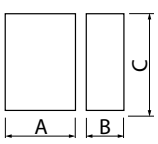

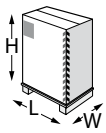

Model	AxBxC	weight	LxWxH	weight
EC005*, EC010*	630x300x800 (24.8x11.82x31.5)	53 (117)	720x410x1020 (28.36x16.14x40.16)	56 (124)
EC020*, EC040*	630x300x800 (24.8x11.82x31.5)	55 (121)	720x410x1020 (28.36x16.14x40.16)	58 (128)
EC080*, EC100*	630x300x800 (24.8x11.82x31.5)	59 (130)	720x410x1020 (28.36x16.14x40.16)	62 (137)

Part number

power supply voltage
0= 230 V 50 Hz
U= 230 V 60 Hz

E C _ _ _ D H 0 0 _

flow rate
005= 50 l/h
010= 100 l/h
020= 200 l/h
040= 400 l/h
080= 800 l/h
100= 1000 l/h

OVERVIEW DRAWING optimist

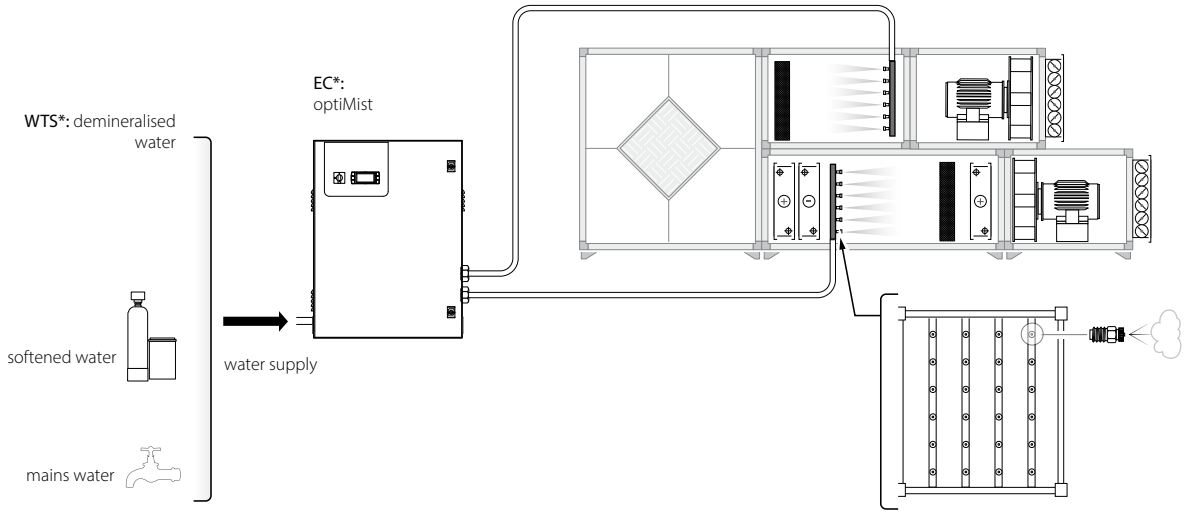

chillBooster

AC102D*, AC052D*, AC012D

chillBooster for chiller, drycooler or gas cooler

Chillbooster cools the air before it is used by the unit for cooling the fluid in the coil. Atomisation takes place against the flow so that the droplets follow the longest route possible, in a way to have sufficient time to evaporate. The cooled air is extracted by the fans and therefore the heat exchange of the coil increases considerably! Some of the droplets may wet the fins on the coil: this water will tend to evaporate, absorbing heat and thus providing additional cooling capacity. Some of the water, however, will drip down from the fins and will be drained.

ChillBooster allows liquid coolers and condensers to deliver rated capacity even in periods with high temperatures, which often coincide with maximum loads, without oversizing the systems.

chillBooster comprises a pumping station and a distribution system to spray finely atomised water in the opposite direction to the air flow through the coils on the chiller. The pumping station is compatible for use with both untreated drinking water and demineralised water. The main components of the system are:

- an electrical panel for ON/OFF control of capacity;
- a pump power supply solenoid valve;
- inlet water pressure switch;
- an impeller pump with incorporated pressure adjustment valve calibrated at 10 bars;
- outlet pressure gauge;
- high temperature protection heating valve;
- drain solenoid valve for unit shutdown;
- modular stainless steel manifolds with 20 mm diameter;
- atomiser nozzles:
- distribution system drain solenoid valves, at line end;
- corrugated steel flexible connection hoses;
- metal compression fittings;
- UV system for cleaning and disinfecting water inside the cabinet (optional).

Supply and top-up water

ChillBooster can operate with untreated drinking water and with demineralised water. If using mains water, following evaporation, the minerals dissolved in the feedwater will be carried by the air stream in the form of very fine dust, and will partly precipitate on the surface of the heat exchanger fins or in the duct. The problem is reduced when using demineralised water produced by reverse osmosis.

Applied to chiller/drycoolers, to limit the formation of deposits on the surface of the coils. Whenever untreated water is used it is recommended to limit the use of ChillBooster only to when necessary and indicatively not over 200 h per year.

Components

End-of-line solenoid valve (ACKV*)

End-of-line solenoid valve powered by the cabinet to completely empty the atomisation water circuit.

Manifold (ACKT0*)

AISI304 stainless steel, Ø20 mm manifolds, with threaded holes for nozzles, available with 7 holes (1052 mm), 13 holes (1964 mm) or 19 holes (2876 m).

Quick couplings (ACKR*)

Compression fittings for unthreaded Φ20 mm pipes in brass or stainless steel.

Flexible hose (ACKT*)

AISI304 stainless steel corrugated flexible hoses.

Nozzles (ACKN*)

Nozzles with capacity of 5, 7.5 or 15 kg/h at 10 bars.

Plugs (ACKCAP0000)

If the 1/8" NPT holes on the manifolds need to be closed, stainless steel plugs are available.

Layout example for chiller or drycooler

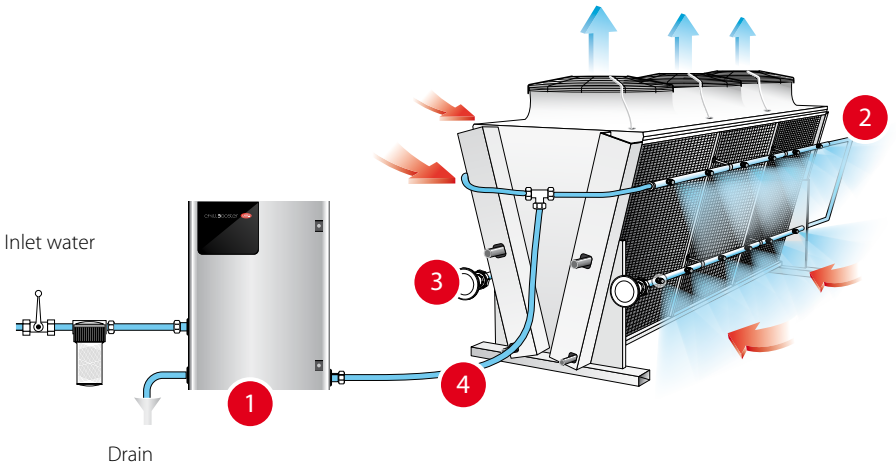

1. *pumping station, ON/OFF control*
2. *modular stainless steel manifolds; atomiser nozzles*
3. *distribution system drain solenoid valves*
4. *flexible connection pipes and metal fittings*

chillBooster table

Features	AC012*	AC052*	AC102*
Flow rate - kg/h	100	500	1000
Electrical power - kW	0.2	0.4	0.6
Temperature - °C (°F)	5T40 (40-104)		
Heat valve discharge connection	pipe OD 10, ID 5		
Certification	CE/UL (depending on the model)		
UV lamp duration (optional)	4000 h		
Protection rating	IP55		
Water supply			
Connection	1/2"G female		
Pressure - min.-max.	2-8 bars, 0.2-0.8 Mpa, 29-115 Psi		
Water drain			
Connection	1/2"G female		
Electrical features	230 V, 50/60 Hz (depending on the model)		
Output			
Connection	1/2"G female		
Supply water			
Conductivity - µS/cm	<100		
Total hardness	<5 °fH (50 ppm $CaCO_3$)		

Dimensions in mm (in) and weights in kg (lb)

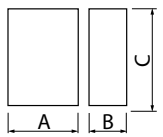

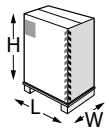

Model	AxBxC	weights	LxWxH	weights
AC*****0**	630x300x800 (24.8x11.82x31.50)	49 (108)	720x410x1020 (28.5x16x40)	52 (115)
AC*****01*	630x300x800 (24.8x11.82x31.50)	53 (115)	720x410x1020 (28.5x16x40)	56 (125)

Part number

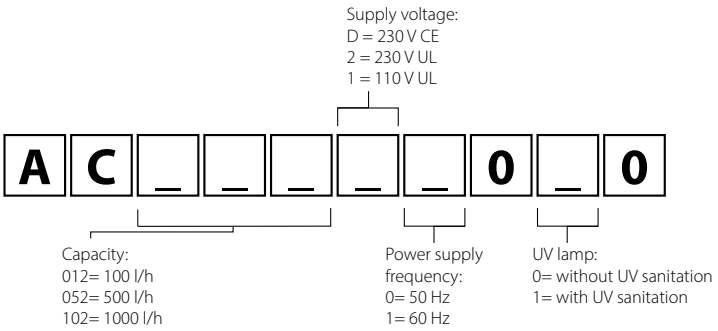

OVERVIEW DRAWING ChillBooster

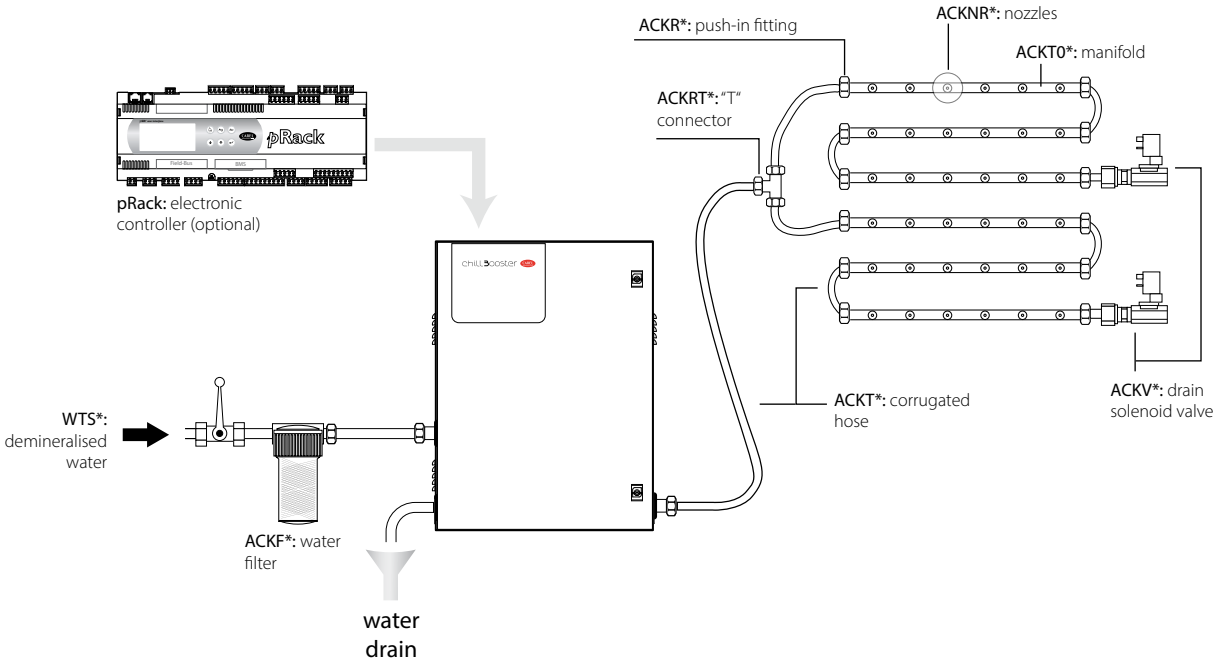

Product guide

Water treatment systems

+800D03001 - REV 03

Reverse osmosis water treatment systems (WTS)

The secret to efficient and hygienically safe operation of evaporative humidification and cooling systems is the quality of the water. The range of reverse osmosis water treatment systems (WTS) produces demineralised water with a level of purity suitable for supplying CAREL humidifiers. The recent redesign, implemented based on the experience acquired over the years, responds to the needs for usability in the field, installation flexibility, water saving and space optimisation.

Why use demineralised water?

For heater or gas-fired steam humidifiers, water **treatment minimises the build-up of mineral salts and fouling in boilers, extending their working life**: maintenance is reduced and there is no more need to shut the unit down for periodical cleaning.

In adiabatic humidifiers, demineralised water prevents the nozzles from being blocked by dirt, the accumulation of mineral salts in air handling units and the dust of mineral salts from being introduced into the humidified environment. Maintenance costs are reduced and the ventilation systems are more hygienic, as desalinated water contains no bacteria or contaminants. In the specific case of ultrasonic humidifiers, the elasticity of the transducers will thus not be affected by fouling: CAREL humiSonic components, if used with demineralised water, are guaranteed for a minimum of 10,000 hours' uninterrupted operation!

Limits on maximum conductivity and water hardness are also specified by standards, such as UNI8884, VDI6022, VDI3803 and L8.

What is reverse osmosis?

This is a technique in which the water being purified is pumped at high pressure and forced through a semi-permeable membrane with pores smaller than 0.001 µm in diameter: the majority of the dissolved ions are filtered by the membrane, thus producing relatively pure water. The removal of minerals, measured as a percentage of the original mineral content, may vary from 95% to 99% and even higher. Automatic operation and reduced operating costs make the use of this technique quite extensive, bringing evident advantages.

Benefits

- easy start-up: WTS is pre-calibrated for simple and fast start-up. The automatic "flushing" procedure reduces maintenance;
- integration: the new WTS system guarantees perfect operation with CAREL humidifiers;
- maximum hygiene: WTS provides desalinated water containing no bacteria or contaminants, with the additional safety of the ultraviolet disinfection system.

WTS compact

ROC*

The compact version of the new CAREL reverse osmosis system has been developed for treating water intended for use with humiSonic and heaterSteam humidifiers and small atomisers. Supplied with mains drinking water, it generates demineralised water with suitable physical/chemical characteristics, flow-rate and pressure for operation of the humidifiers.
The main strengths of this product are:

- reliability: unlike many systems on the market, it is equipped with an alternating current vane pump with built-in bypass, rather than a direct current diaphragm pump. This solution does not generate overheating, responding continuously to activation requests;
- water saving: recirculation of a portion of the concentrate makes it possible to use up to 30% less main water compared to the previous generation WTS compact;
- easy set-up: the discharge and recirculation flow-rates are fixed by flow reducers, therefore no adjustments need be made;
- simple maintenance: the only routine maintenance is the simple replacement of filters and flow reducers.

System composition

- micrometre safety pre-filtering (removes impurities from the water);
- activates carbon dechlorination system (protects the membrane);
- electrical control panel and rotary vane pump;
- TFC reverse osmosis membrane;
- UV disinfection system (optional).

How it works

When switched on, WTS compact produces water by reverse-osmosis, filling the expansion vessel and keeping the circuit pressure in the range of 2 - 4 bars. The demand for water from the humidifier is fulfilled by the water contained in the vessel, while the consequent pressure drop in the circuit, measured by a pressure switch, activates a new desalinated water production cycle.

Available in different sizes

WTS compact is available in four sizes, from 25 to 140 l/h. For higher flow-rates, the Large version is required.

Certification

WTS compact complies with the following directives:

- Low Voltage Directive 2014/35/EU;
- EMC Electromagnetic Compatibility Directive 2014/30/EU;
- RoHS directive 2011/65/EU and related 863/2015/EU
- WaterMark WMTS 101:2018.

Controller

(ROKC00EP01)

WTS compact comes with an electronic controller that manages all the functions and guarantees intrinsic system safety. Two different groups of parameters are accessible, depending on the type of user profile (user or service).

Accessories

Expansion vessel

(AUC018K000 / AUC040K000)

The expansion vessel is equipped with an internal elastic membrane that keeps the water pressure in the range 2-4 bars. Ideal for simple and effective installation. The rated volume is 18 or 40 litres.
To increase the buffer capacity beyond 40 litres, floor-standing expansion vessels, usually associated with large WTS systems, are also available.

UV lamp disinfection system

(ROKC00DBKA)

To guarantee maximum hygiene, a UV sanitising lamp CAN BE installed upstream of the humidifier. The lamp shines UV light on the flow of supply water, helping to eliminate any biological contaminants that may be present, such as bacteria, viruses, mould, spores and yeast. Maximum flow-rate 240 l/h.

Mixing kit

(ROKC00BLD1 / ROKC00BLD2)

The kit for mixing the permeate with mains water allows operation of immersed electrode steam humidifiers in places with particularly hard water, as it reduces the frequency of cylinder replacement.

Feedwater requirements

Conductivity - µs/cm	< 1000
Hardness	≤ 30°f
Turbidity	1 NTU max
SDI (Silt Density Index)	≤ 3
Free chlorine at inlet - mg/l	≤ 0.25
TDS (Total Dissolved Solid) - ppm	≤ 750
Bacterial load	absent

WTS compact table

Features	ROC0255002	ROC0405002	ROC0805002	ROC1405002
Feedwater pressure - bars	2 to 5			
Feedwater temperature - °C	5 to 30			
Minimum feedwater flow-rate - l/h	150	150	200	350
Room temperature - °C	5 to 40			
Operating pressure - bars	≤8			
Permeate ± 10% (T=16°C – TDS 250 ppm) - l/h	25	40	80	140
Connections				
Total installed power	275		550	575
Single-phase power supply	230 V/50 Hz			
Power supply connections	G 3/4" M			
Permeate connection - Ø mm	10			
Concentrate drain connection - Ø mm	8			

Not available for sale on the North American market.

Dimensions in mm (in) and weights in kg (lbs)

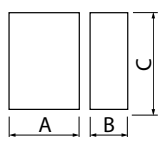

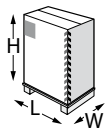

Model	AxBxC	weight	LxWxH	weight
ROC0255002	420x235x580 (16.5x9.3x22.9)	19 (41.9)	440x520x600 (11.2x20.5x23.6)	20 (44.1)
ROC0405002	420x235x580 (16.5x9.3x22.9)	21 (46.3)	440x520x600 (11.2x20.5x23.6)	22 (48.5)
ROC0805002	420x235x580 (23.6x9.3x22.9)	21 (46.3)	440x520x600 (11.2x20.5x23.6)	22 (48.5)
ROC1405002	770x220x700 (30.3x8.7x27.6)	36 (79.4)	870x450x800 (34.3x17.7x31.5)	67 (147.7)

Part number

R O C _ _ _ 5 0 0 2

Capacity:
025= 25 l/h
040= 40 l/h
080= 80 l/h
140= 140 l/h

WTS large

ROL*

Completing the range of WTS products, CAREL offers the WTS Large, with a capacity from 160 to 1200 l/h.
WTS Large is suitable for higher capacity steam humidifiers, such as gaSteam and heaterSteam, and for the adiabatic humidifier range.
The new WTS large has been designed and developed based on market and user feedback.

New features

- design: without bulky cabinets, the unit has been made suitable for complete integration into industrial environments, as well as to assist access for any type of work on the unit;
- rationalised system layout: all the system components are easily and immediately identifiable directly on the printed diagram in the user manual;
- flow switches on each circuit: together with the valves, these ensure a very fast calibration time;
- recirculation setting: keeping a high recovery value avoids excess water consumption;
- long-term operation: rated data guaranteed for at least two years' operation;
- dedicated membrane for steel pump and brass pump: conductivity limits respected without diluting with mains water, avoiding contamination of the permeate;
- NSF descaler: together with the standard descaler, an NSF version is also available for applications that require food safety certification.

Descaler and metering pump assembly

The reverse osmosis system frame houses the descaler tank, metered into the water (1:40) to prevent scale build-up on the membrane. The metering pump delivers the right quantity based on the flow-rate of treated water. The dosage is settable using a knob on the metering pump control panel.

Maintenance

Routine maintenance involves:

- replacement of the CBC activated carbon cartridge (every 4 months or every 2 months if the amount of free chlorine in the water supply exceeds 0.1 ppm);
- replacement of the micron filter (around every 4 months or when the pressure read by the pressure gauge downstream of the filters is lower than 1 bar);
- periodically filling the descaler tank; this is also signalled directly by the electronic controller via a warning message;
- replacement of the membranes need to be replaced at the end of their working life, in other words, when they no longer guarantee the required flow-rate or conductivity;
- replacement of the UV lamp (optional, installed downstream of the expansion vessel or permeate storage tank) at the end of its working life, generally once a year, or after around 10,000 operating hours.

Accessories

Expansion vessel

(AUC***K000)

It is equipped with an internal elastic membrane that keeps the demineralised water pressure in the range 2-4 bars. Ideal for simple and effective installation. Available in 5 sizes for rated water volumes from 80 to 500 litres.

Storage vessel with pump

(RT300M2000)

Capable of pressurising water up to 30 m. Ideal for applications with large differences in height.

UV lamp disinfection system

(ROKL00DBK1 / ROKL00DBK2)

UV lamp disinfection system, installed upstream of the humidifier, guarantees the highest level of hygiene. The lamp irradiates the feedwater flow with UV rays, helping eliminate any biological pollutants, such as bacteria, viruses, mould, spores and yeast present in the water.
Maximum flow-rate 680 / 1360 l/h.

Antiscalant descaler liquid

(ROKL00AS**)

Pack of 10 or 25 kg of descaling liquid, to prevent calcium and magnesium build-up on the membranes. Available in two versions: EN 15040 compliant or NSF certified, in both cases for water intended for safe human consumption.

Feedwater requirements

Feedwater pressure - bars	2 - 5
Operating pressure - bars	≤ 12
Permeate outlet pressure - bar	≤ 3
Feedwater temperature - °C	5 - 30
Conductivity - µs/cm	< 1000
Turbidity	< 1 NTU
Iron - ppm	< 0.15
SDI (Silt Density Index)	< 3
Free chlorine - ppm	< 0.25
TDS (Total Dissolved Solid) - ppm	< 750
Water hardness TH - ppm	< 500 $CaCO_3$ eq (<50°fH) (< 28°dH)
SiO_2 - ppm	< 15
TOC (Total Organic Carbon) - mg/l	< 3
CODE (Chemical Oxygen Demand) - mg/l	< 10

Installation example

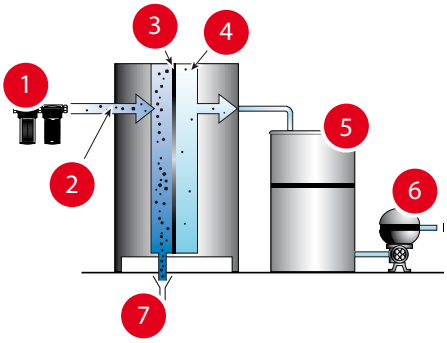

1. *pre-treatment (microfiltration and activated carbon filters)*
2. *mains water inlet (water + mineral salts)*
3. *membrane*
4. *demineralised water*
5. *storage tank*
6. *generic points of use*
7. *drain water (concentrated mineral salts)*

WTS large table

Features	ROL160*00*	ROL320*00*	ROL460*00*	ROL600*00*	ROL1K0*00*	ROL1K2*00*
Demineralised water production - l/h	160	320	460	600	1000	1200
Drain - l/h	160	150	460	600	470	570
Installed power - W	960		1650			
Power supply	230 V, 50 Hz single-phase or 230 V, 60 Hz single-phase					
Water connections						
Feedwater inlet	G 3/4" M					
Treated water outlet	G 1/2" M					
Concentrated drain	G 1/2" M					

Dimensions in mm (in) and weights in kg (lb)

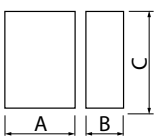

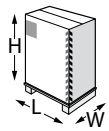

Model	AxBxCxD	weight	LxWxH	weight
ROL160*00*	940x510x1555 (33.5x20.1x61.2)	75 (165)	1150x810x1720 (45.3x31.2x67.8)	110 (243)
ROL320*00*	940x510x1555 (33.5x20.1x61.2)	83 (183)	1150x810x1720 (45.3x31.2x67.8)	120 (265)
ROL460*00*	1090x700x1555 (42.9x27.6x61.2)	100 (220)	1150x810x1720 (45.3x31.2x67.8)	150 (331)
ROL600*00*	1090x700x1555 (42.9x27.6x61.2)	100 (220)	1150x810x1720 (45.3x31.2x67.8)	150 (331)
ROL1K0*00*	1090x700x1555 (42.9x27.6x61.2)	125 (276)	1150x810x1720 (45.3x31.2x67.8)	175 (386)
ROL1K2*00*	1090x700x1555 (42.9x27.6x61.2)	125 (276)	1150x810x1720 (45.3x31.2x67.8)	175 (386)

Part number

R	O	L	_	_	_	_	0	0	_

Capacity:
160= 160 l/h
320= 320 l/h
460= 460 l/h
600= 600 l/h
1K0= 1000 l/h
1K2= 1200 l/h

Power supply:
5= 50 Hz
6= 60 Hz

Filtering:
0= very high filtration
B= high filtration

OVERVIEW DRAWING WTS

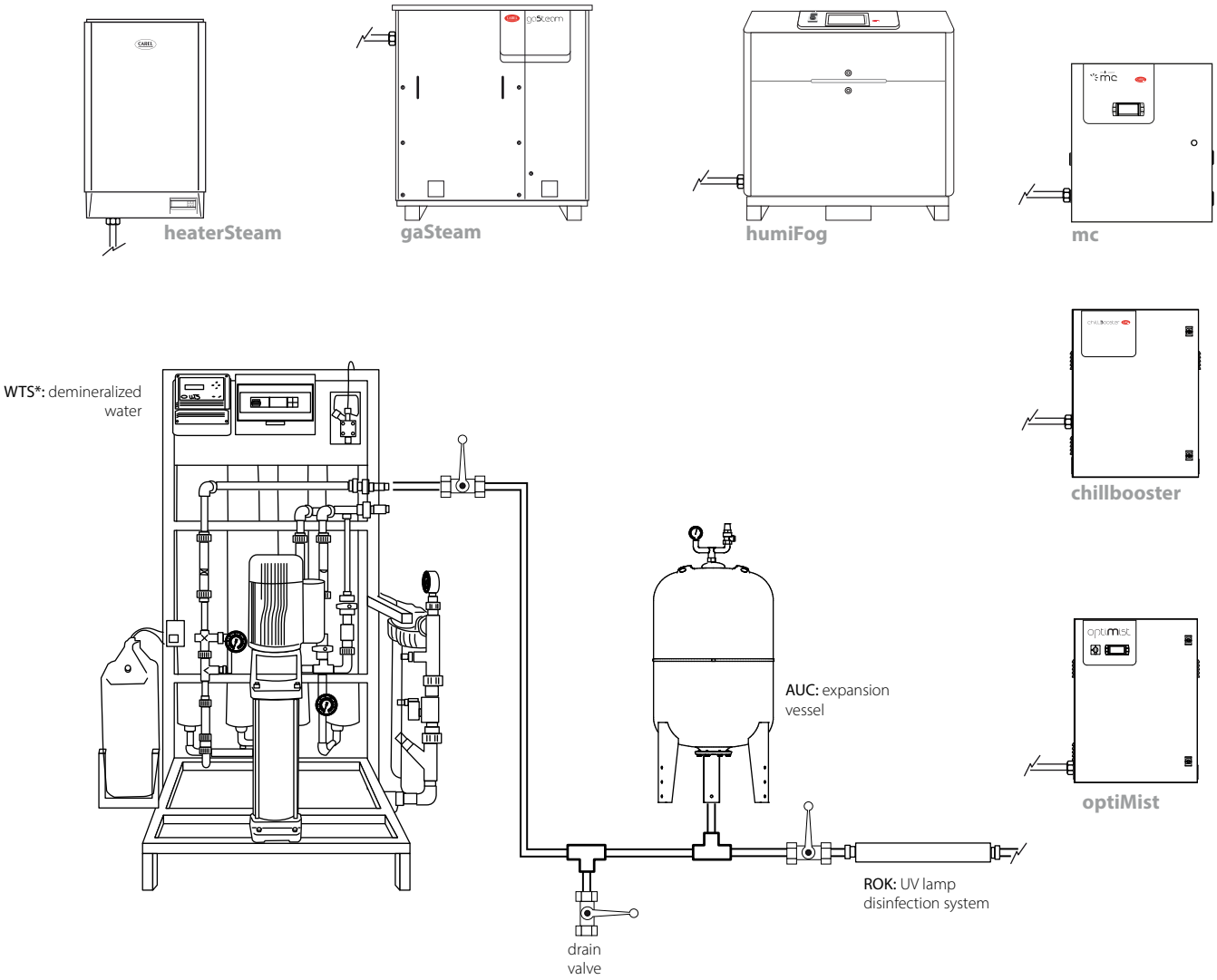

Sensors and protection devices

+800E03001 - REV 03

Sensors and protection devices

CAREL offers increasingly advanced and complete global solutions.

For this reason, CAREL has designed an entire range of probes that respond to the needs of HVAC/R installers and manufacturers, as well as for the control of CAREL's own line of humidifiers.

The range envisions temperature and humidity sensors with different uses, housed in sockets, ducted, residential or industrial environment, pressure transducers, smoke, fire and flood detectors, air quality probes, gas leak detectors for refrigerant units, guaranteeing performance and compatibility with all CAREL controllers.

The range has been enhanced with the most innovative technological solutions, offering new international standards at increasingly competitive prices.

Advantages

CAREL probes, as well as being characterised by the acknowledged performance that sets them apart, are very versatile and can satisfy various market requirements.

In fact, all the probes have been especially designed to be compatible not only with all CAREL controllers, but also with the most commonly used standards worldwide.

The temperature and humidity probes, offering a great choice between active and passive technology, are available in different operating ranges.

The pressure transducers are available in a ratiometric version, 0 to 5 V and 4 to 20 mA, also in a sealed version (to be installed without capillary directly onto the piping) offering improved performance in terms of precision.

The air quality sensors offer a new and important accessory to installers and manufacturers of AHUs, absolutely in line with CAREL quality.

The smoke/fire and flood detectors are small devices with auto-calibration function, thus adapting to different environmental conditions without losing activation accuracy.

For the detection of CFCs, HFCs and CO_2 gas refrigerants, CAREL offers a range of sensors designed to satisfy requirements in the industrial refrigeration and air-conditioning for supermarkets, shopping centres, and other public places.

Temperature, humidity and temperature/ humidity probes.

DPW*: for installation in the room
DPD*: for installation in the duct

This probes are particularly suitable for civil and commercial environments where particular attention is paid to design.
They are used in heating and air conditioning systems that use ducts.
The range also envisions models with RS485 connection with CAREL and Modbus® protocol.

Technical specifications

Power supply: 12/24 Vac -10/15%
9 to 30 Vdc ±10%
Operating conditions:
- DPW*: -10T60 °C, <100% R.H. non cond.;
- DPD*: -10T60 °C, -20T70, <100% R.H. non cond.

Protection rating:
- DPW*: IP30;
- DPD*: IP55, IP40 sensor.

Assembly:
- DPW*: wall-mounted;
- DPD*: duct;

Number of I/Os:
- **analogue outputs:** -0.5 to 1 V, 0 to 1 V, 0 to 10 V, 4 to 20 mA

Serial Ports: RS485 (specific model)
Dimensions:
- DPW*: 127x80x30 mm;
- DPD*: 98x105x336 mm.

Connections: screw terminal board for cables up to 1.5 mm^2

Active temperature/ humidity probes

DPP*: for industrial environment

Specifically designed to measure high levels of humidity with great accuracy.
The range also envisions models with RS485 connection with CAREL and Modbus® protocol.

Technical specifications

Power supply: 12/24 Vac -10/15%,
9 to 30 Vdc ±10%
Operating conditions: -10T60 °C, -20T70, <100% R.H. non cond.
Protection rating:
- IP55 (container);
- IP54 (sensor).

Assembly: wall-mounted
Number of I/Os:
- **analogue outputs:** -0.5 to 1 V, 0 to 1 V, 0 to 10 V, 4 to 20 mA

Serial Ports: RS485 (specific model)
Dimensions: 98x170x44
Connections: screw terminal board for cables up to 1.5 mm^2

Active immersion temperature probes

ASIT*: immersion

The ASIT* immersion probes are used in cases where it is necessary to measure the temperature inside cooling and heating circuits.
They are particularly adaptable where the sensitive element must be in direct contact with the fluid being controlled.

Technical specifications

Power supply: 12/24 Vac -10/15%,
9…30 Vdc ±10%
Operating conditions: -10T70 °C, <100% R.H. non cond.
Protection rating:
- IP55 (container);
- IP67 (sensor).

Assembly: direct or with housing
Number of I/Os:
- **analogue outputs:** -0.5 to 1 V, 4 to 20 mA

Dimensions: 94x102x176
Connections: screw terminal board for cables up to 1.5 mm^2

Active universal temperature probes

ASET*: universal

The universal temperature probes are used for many applications; in particular the ASET03* version has an electronic amplifier, protected by a container with IP55 protection rating, which allows remote control up to 2oo m with 4 to 20 mA output.

Technical specifications

Power supply: 12/24 Vac -10/15%, 9…30 Vdc ±10%
Operating conditions: -30T90 °C or 30T150 °C, <100% R.H. non cond.
Protection rating:
- IP55 (container);
- IP67 (sensor).

Assembly: directly in socket
Number of I/Os:
- **analogue outputs:** -0.5 to 1 V, 4 to 20 mA

Dimensions: 94x102x176
Connections: screw terminal board for cables up to 1.5 mm^2

Outdoor probes

DPU*: outdoor

CAREL outdoor electronic sensors are used with heat pump controllers to offset the water temperature set point based on the outside temperature and to manage climate zones, and with air handling units to measure the outside temperature.
Built to withstand the most extreme climatic conditions, these are available in two versions:
- temperature sensor: -50 to 90 °C,
- temperature and humidity sensor: -35 to 80 °C.

Technical specifications

Power supply: 24 Vac ±20% or 15 to 36 Vdc (±10%)
Operating conditions:
- temperature version: -50T90 °C;
- temp. and humidity version: -35T80 °C

Protection rating: IP55 (EN60529)
Assembly: wall-mounted
Number of I/Os:
- **analogue outputs:** 4 to 20 mA

Dimensions:
- temperature ver.: 72x64x39.5 mm;
- temp. & humirity ver: 108x70x73.5 mm

Connections: two-pin screw terminal for cables from 0.14 to 1.5 mm^2

T/H, CO2, VOC, PM 2,5, PM10 air quality

DPWQ*: for installation in the room
DPPQ*: for installation in the duct

These analyse the quality of the air and are ideal for air ventilation and handing systems in domestic and commercial areas.

Main functions:
- measurement of air quality;
- quantitative analysis of contamination by parts of polluting gases;
- setting of a sensitivity threshold depending on that envisioned;
- for the ventilation of rooms only when necessary, contributing to a large energy saving.

Technical specifications

Power supply: 24 Vac/dc ±10%, 50/60 Hz
Operating conditions: 0T50 °C, 10/90% R.H. non cond.
Protection rating:
- IP55 (container);
- IP67 (sensor)

Assembly:
- DPWQ: wall-mounted;
- DPDQ: duct

Number of I/Os:
- **analogue outputs:** 0 to 10 V, 4 to 20 mA or RS485 Modbus

Dimensions:
- DPWQ*: 95x97x30 mm; 79x81x26 mm;
- DPDQ*: 108x70x262.5 mm; 64x72x228.4 mm.

Connections: screw terminal board for cables up to 1.5 mm^2

Refrigerant gas leak detector

DPWL*

The refrigerant gas detection sensor is a device that indicates leaks of the most common gases (R22, R134a, R290, R404a, R407c, R407F, R410a, R507a, CO_2 and NH3). It can be used in stand-alone applications, integrated with Carel controllers or with third party devices. It envisions connection with the CAREL controller via the analogue, digital output or via RS485 Modbus® serial connection. When a leak above a certain concentration is detected, the sensor informs the controller of the alarm and locally activates an audible and visual signal and a relay (SPDT) at the same time. It offers the advantage of intervening immediately on gas leaks, thus preventing unit standstill and guaranteeing the safety of persons in the vicinity.
Its installation ensures compliance with the European F-GAS and EN378 and ASHRAE 15 standards.

Technical specifications

Power supply: 12 to 24 Vac/Vdc ±20% 50/60 Hz
Operating conditions:
- semicond. ver. -20T50°C;
- infrared ver. -40T50°C 80% R.H. non condensing.

Protection rating:
- semicond. ver. IP41;
- infrared ver. IP66.

Assembly: wall-mounted
Number of I/Os:
- **analogue outputs:** configurable 0 to 5 V, 1 to 5 V, 0 to 10 V, 2 to 10 V, 4 to 20 mA;
- **digital outputs:** 1 amp at 24 Vac/Vdc.

Serial Ports: RS485 Modbus®
Connections: disconnectable clamps, 0.5 mm^2 cable cross-section

gas leak sensors

Temperature probes with NTC thermistor

NTC*HP*, NTC*WP*, NTC*WH*, NTC*WF*, NTC*HF and NTC*HT, NTCINF*, NTC*PS*

CAREL offers a range of sensors with different features for the various controllers, suitable for different applications mainly in the HVAC/R market sector.

The accuracy obtained thanks to the technical solutions used in developing the sensor, the reliability as a result of the tests to which they are subjected, mean that CAREL NTC probes are reliable transducers for measuring temperature at a low cost.

Probes for socket assembly are available in strips for installation on piping for pass-through with or without pre-heater, to measure the core temperature of the product, and a sensor for estimating product temperature.

Technical specifications

Operating conditions: -50T105 °C
Protection rating: IP67 and IP68
Assembly: depending on the model
Dimensions: depending on the model

Immersion probes

TSN* and TSC*= NTC version
TST* and TSM*= Pt1000 version
TSOPZ= accessories (connectors, fittings, housing…)

CAREL offers a range of TS* series immersion probes in NTC and Pt1000 models, suitable exclusively for hydronic applications.
Quick installation, fast response of the sensor an excellent price/performance ratio are features on which this product range is based.
Connectors are available with cables, fittings and the socket as accessories.

Technical specifications

Operating conditions: -40T90 °C, -40T120 °C
Assembly: on piping
Dimensions:
- TSN* and TSC*: 1/8" GAS x 5 mm
- TST* and TSM: M14 x23 mm with 2 m cable

passive temperature sensors

Temperature probes with PTC, Pt100, Pt1000 sensor

PTC*

The PTC temperature probes represent a possible solution for both cooling and heating applications, used to measure temperature within the operating range, -50T100 °C and 0T150 °C.

PT100*

The PT100 probes represent the ideal solution for all applications in which it is necessary to measure temperatures within the range from -50 to 400 °C (depending on the models).

PT1*HP*, PT1*WP*, PT1*WF*, PT1*HF*, PT1*HT*; PT1*PS; TSQ*

The Pt1000 probes (PT1* and TSQ*) are suitable for all those applications in which it is necessary to measure temperatures in a range from -50 to 250 °C (TSQ*) and from -50 to 105 °C (PT1*), maintaining accuracy also over long distances.

Probes for socket assembly are available in strips for installation on piping for pass-through with or without pre-heater, to measure the core temperature of the product, and a sensor for estimating product temperature.

Technical specifications

Operating conditions: -50T105 °C, -50T250 °C, -50T350 °C
Protection rating: IP65 and IP67
Dimensions: depending on the model

Pressure transducers 4 to 20 mA series C and D

SPKT*C*, SPK1*, SPK2*, SPK3*, SPKT*D*

The pressure transducers supply an analogue current signal (4 to 20 mA). They are used particularly in refrigeration and air conditioning to measure pressure in cooling circuits, but their high performance allows their use in almost all other applications.
Compatible with all types of refrigerant.
They are available with male and female connection for the C series and only female for the D series.

Technical specifications

Power supply: 8 to 28 Vdc ±20%
Operating conditions:
- -25T80 °C (male);
- -40T135 °C (female).

Protection rating: IP65 (IP67 with built-in connector)
Number of I/Os:
- **analogue outputs:** 4 to 20 mA

Dimensions: depending on the model
Connections: Packard

Ratiometric pressure transducers 0 to 5 V series S

SPKT*S*

The Carel 5 V ratiometric pressure transducers (Sealing) have been developed to be used in commercial refrigeration and air conditioning applications. They are completely hermetic and can be installed directly in contact with the piping, in conditions with the refrigerant fluid lower than the dew point (it is not necessary to use the capillary positioned between piping and sensor).
Available with female connection only

Technical specifications

Power supply: 5 Vdc
Operating conditions: -40T125 °C
Protection rating: IP67
Number of I/Os:
- **analogue outputs:** 0.5 to 4.5 V

Dimensions: Ø21x51 mm
Connections: Packard

Ratiometric pressure transducers 0 to 5 V series P

SPKT*P*

These pressure transducers supply a 0 to 5 V ratiometric signal (automotive standard).
They can be used in air conditioning and refrigeration systems, with exception to those containing ammonia.
The exceptional stability of the output signal and higher degree of EMC/EMI immunity make this an excellent transducer to meet the most severe industrial requirements. Available with female fitting.

Technical specifications

Power supply: 4.5 to 5.5 Vdc
Operating conditions: -40T135 °C
Protection rating: IP65
Number of I/Os:
- **analogue outputs:** 0.5 to 4.5 V

Dimensions: 20x51.6 mm
Connections: Packard

Differential pressure transducers

SPKD*

The differential pressure transducers use a ceramic sensor that supplies a voltage or current signal that is calibrated and compensated by temperature. They are particularly suitable for measuring low pressure values in air conditioning systems, laboratories and clean rooms (non-corrosive air and gas)
The main features are:
- compact construction;
- easy and simple installation;
- model can be configured for 4 different pressure ranges.

Technical specifications

Power supply: 15 to 36 Vdc
Operating conditions: 0T50 °C
Protection rating: IP65
Assembly: panel
Number of I/Os:
- **analogue outputs:** 4 to 20 mA

Dimensions: 70x108x73.5 mm
Connections: screw terminal board for cables up to 1.5 mm^2

Differential pressure switch

Device used to control the differential pressure of the air for filters, fans, air ducts, air-conditioning and ventilation units.
The pressure switch is particularly suitable for control and safety in air-conditioning systems for indicating fan shutdown and clogging of the filters. It is applied in environments with non-aggressive and non-flammable air and gases, also in the version with assembly kit.

Anti-freeze thermostat

This manages heat exchanger (evaporation coils) and electric heater protection for air conditioning and refrigeration systems.
It can be used in all applications where it is necessary to control the temperature in a certain point of the system in order to prevent it dropping below a pre-established safety value.
Moreover, the thermostat offers self-protection if the sensitive element should breakdown.

Flood detector

The flood sensor device can detect the presence of water in an environment. It is usually used for the protection against the flooding of datacentres, offices, laboratories, special rooms. It is made up of a detector (normally positioned on the electric control board) and a sensor (positioned on the point to be controlled).
When the water comes into contact with the sensor, the detector immediately signals an alamr, switching over relay status.

Airflow switch

Flow switch for controlling air or non-aggressive gas flow inside the distribution ducts for air conditioning and air handling units.
It signals the lack of or excessive decrease in flow rate in the duct, thus activating the switch.

Smoke and fire detector

The smoke and heat detectors are electronic devices that can quickly detect dangerous and sudden temperature changes or the increase in fumes. Their peculiarity lies in the self-calibration, i.e. the possibility to maintain the guarantee of activation over time, adapting perfectly to the different environmental conditions, without losing sensitivity.

Combined light and movement sensors

The DPWA series light and occupancy sensors for indoor and outdoor use are devices that measure brightness and detect occupancy in order to identify ambient environmental conditions. They are installed where movement needs to be measured in order to control the functions of the environment, for example, detecting movement so as to lower the ambient temperature when the spaces are not occupied.

The light sensor measures brightness, and is used to control luminaires, lighting systems, blinds and awnings, etc., as well as to monitor light conditions in workplaces, glasshouses, stores, workshops, corridors, outside areas, industrial environments, offices homes and businesses, ensuring constant control of the lighting system based on natural light, while the photocell or twilight sensor function and awning control prevents needless heating of the controlled spaces.

Active temperature and humidity probes

Models	temper. range	temper. range	output
Active probes for rooms, power supply 9 to 30 Vdc/12 to 24 Vac			
DPWT010000	-10T60 °C		selectable 0 to 1 V/-0.5 to 1 Vdc/4 to 20 mA
DPWT011000	-10T60 °C		NTC 10 K at 25 °C
DPWC111000	-10T60 °C	10 to 90% R.H.	• NTC 10 K at 25 °C (temperature) • selectable 0 to 1 V/-0.5 to 1 Vdc/4 to 20 mA (humidity)
DPWC110000	-10T60 °C	10 to 90% R.H.	selectable 0 to 1 V/-0.5 to 1 Vdc/4 to 20 mA
DPWC115000	-10T60 °C	10 to 90% R.H.	• NTC 10 K at 25 °C (temperature) • 0 to 10 Vdc (humidity)
DPWC112000	-10T60 °C	10 to 90% R.H.	0 to 10 Vdc
DPWC114000	-10T60 °C	10 to 90% R.H.	opto-isolated RS485 serial
DPWT014000	-10T60 °C		opto-isolated RS485 serial
Active probes for industrial environments, power supply 9 to 30 Vdc/12 to 24 Vac			
DPPT010000	-20T70 °C		selectable 0 to 1 V/-0.5 to 1 Vdc/4 to 20 mA
DPPT011000	-20T70 °C		NTC 10 K at 25 °C
DPPC111000	-10T60 °C	10 to 90% R.H.	• NTC 10 K at 25 °C (temperature) • selectable 0 to 1 V/-0.5 to 1 Vdc/4 to 20 mA (humidity)
DPPC110000	-10T60 °C	10 to 90% R.H.	selectable 0 to 1 V/-0.5 to 1 Vdc/4 to 20 mA
DPPC210000	-20T70 °C	0 to 100% R.H.	selectable 0 to 1 V/-0.5 to 1 Vdc/4 to 20 mA
DPPC112000	-10T60 °C	10 to 90% R.H.	0 to 10 Vdc
DPPC212000	-20T70 °C	0 to 100% R.H.	0 to 10 Vdc
DPPT014000	-10T60 °C	10 to 90% R.H.	opto-isolated RS485 serial
DPPC114000	-10T60 °C	10 to 90% R.H.	opto-isolated RS485 serial
DPPC214000	-20T70 °C	0 to 100% R.H.	opto-isolated RS485 serial
Active probes for ducts, power supply 9 to 30 Vdc/12 to 24 Vac			
DPDT010000	-20T70 °C		selectable 0 to 1 V/-0.5 to 1 Vdc/4 to 20 mA
DPDT011000	-20T70 °C		NTC 10 K at 25 °C
DPDC111000	-10T60 °C	10 to 90% R.H.	• NTC 10 K at 25 °C (temperature) • selectable 0 to 1 V/-0.5 to 1 Vdc/4 to 20 mA (humidity)
DPDC110000	-10T60 °C	10 to 90% R.H.	selectable 0 to 1 V/-0.5 to 1 Vdc/4 to 20 mA
DPDC210000	-20T70 °C	0 to 100% R.H.	selectable 0 to 1 V/-0.5 to 1 Vdc/4 to 20 mA
DPDC112000	-10T60 °C	10 to 90% R.H.	0 to 10 Vdc
DPDC212000	-20T70 °C	0 to 100% R.H.	0 to 10 Vdc
DPDT014000	-20T70 °C		opto-isolated RS485 serial
DPDC114000	-10T60 °C	10 to 90% R.H.	opto-isolated RS485 serial
DPDC214000	-20T70 °C	0 to 100% R.H.	opto-isolated RS485 serial
DPUT011000	-50T90 °C		NTC 10 K at 25 °C
DPUC110000	-35T80 °C	0 to 90% R.H.	NTC 10 K at 25 °C and 4 to 20 mA umidity
Compact probe			
DPRC11A000	-10T60 °C	10 to 90% RH	0.5 - 4.5 output, 5 V power supply, 1 mm cable
DPRC13A000	-10T60 °C	10 to 90% RH	0.5 - 4.5 output, 5 V power supply, 3 mm cable

Container protection rating:	IP55 for DPD, DPP	for duct and technical environment)
	IP30 for DPW	(wall-mounted)
Sensitive element protection rating	IP30	for DPW
	IP40	for DPD
	IP54	for DPP
Time constant, temperature	in still air	300 s
	in ventilated air (3 m/s)	60 s
Time constant, humidity	in still air	60 s
	in ventilated air (3 m/s)	20 s

Models	temperature range	output
Active probes for immersion and power supply environment 9 to 30 Vdc/12 to 24 Vac		
ASIT030000	-30T90 °C	selectable -0.5 to 1 Vdc/4 to 20 mA
Active probes for universal power supply use 9 to 30 Vdc/12 to 24 Vac		
ASET030000	-30T90 °C	selectable -0.5 to 1 Vdc/4 to 20 mA
ASET030001	-30T90 °C	selectable -0.5 to 1 Vdc/4 to 20 mA
ASET030002	-30T150 °C	selectable -0.5 to 1 Vdc/4 to 20 mA

Air quality probes

Models	type	output
For rooms, 24 Vac/15 to 36 Vdc		
DPWQ306000	V.O.C.	0 to 10 Vdc or 4 to 20 mA
DPWQ402000	CO2	0 to 10 Vdc
DPWQ502000	V.O.C. and CO2	0 to 10 Vdc
For ducts, 24 Vac/15 to 36 Vdc		
DPDQ306000	V.O.C.	0 to 10 Vdc or 4 to 20 mA
DPDQ402000	CO2	0 to 10 Vdc
DPDQ502000	V.O.C. and CO2	0 to 10 Vdc

Passive temperature probes

Models	range	accuracy	constants (time) in fluid	IP
NTC*				
NTCI*HP**	-50T105 °C	25 °C: ±1%	25 s	IP67
NTCI*WF**	-50T105 °C	25 °C: ±1%	10 s	IP67
NTCI*WH**	-50T105 °C	25 °C: ±1%	30 s	IP68 permanent
NT*WG**	-50T105 °C	25 °C: ±1%	20 s	IP67
NT*HT**	0T150 °C	±0.5 °C, -10T50 °C - 25 °C: ±1.0 °C; -50T85 °C ±1.6 °C; +85T120 °C - ±2.1 °C; +120T150 °C	30 s	IP55
NT*HF**	-50T90 °C	±0.5…25 °C; ±1.0 °C from -50T90 °C	50 s	IP55
NT*WH*	-50T105 °C	25 °C; ±1%	30 s	IP68 permanent
NT**WS*	-40T105 °C	25 °C; ±1%	50 s	IP67
NTC*PS*	-50T105 °C	25 °C: ±1%	50 m	IP67
NTCINF	-50T110 °C	25 °C: ±1%	45 s	IP67
TSN*	-40T120 °C	25 °C: ±1%	30 s	IP68
TSC*	-40T90 °C	25 °C: ±1%	45 s	IP68
PT100*				
PT100000A1	-50T250 °C	IEC 751 class B	20 s	IP65
PT100000A2	-50T400 °C	IEC 751 class B	20 s	IP65
PT1000				
PT1*HP*	-50T105 °C	IEC 751 class B	10 s	IP67
PT1*WF*	-50T105 °C	IEC 751 class B	15 s	IP67
PT1*WP*	-50T105 °C	IEC 751 class B	25 s	IP68 limited
PT1*HF*	-50T105 °C	IEC 751 class B	15 s	IP67
PT1*HT*	-50T250 °C	IEC 751 class B	20 s	IP67
PT1*PS*	-50T105 °C	IEC751 class B	50 m	IP67
TSQ15MAB00	-50T250 °C	IEC 751 class B	10 s	IP65
TST*	-40T120 °C	IEC 751 class B	10 s	IP68
TSM*	-40T90 °C	IEC 751 class B	10 s	IP68
PTC				
PTC0*0000	0T150 °C	±2 °C; 0T50 °C - ±3 °C; -50T90 °C - ±4 °C; 90T120 °C	15 s	IP65
PTC0*W*	-50T100 °C	±2 °C; 0T50 °C - ±3 °C; -50T90 °C - ±4 °C; 90T120 °C	15 s	IP67
PTC03000*1	-50T120 °C	±2 °C; 0T50 °C - ±3 °C; -50T90 °C - ±4 °C; 90T120 °C	15 s	IP67

Pressure transducers

Models	power supply:	operating temperature	range	accuracy	output signal	constants (time)	IP
SPKT00-P0: 0 to 5 V ratiometric - female series P							
53	4.5 to 5.5 Vdc	-40T135 °C	4.2 relative bar	±1,2%	0.5 to 4.5 V	10 ms	IP65 [1]
13	4.5 to 5.5 Vdc	-40T135 °C	9.3 relative bar	±1,2%	0.5 to 4.5 V	10 ms	IP65 [1]
33	4.5 to 5.5 Vdc	-40T135 °C	34.5 relative bar	±1,2%	0.5 to 4.5 V	10 ms	IP65 [1]
43	4.5 to 5.5 Vdc	-40T135 °C	17.3 relative bar	±1,2%	0.5 to 4.5 V	10 ms	IP65 [1]
B6	4.5 to 5.5 Vdc	-40T135 °C	45.0 relative bar	±1,2%	0.5 to 4.5 V	10 ms	IP65 [1]
F3	0.5 to 5.5 Vdc	-40T135 °C	20 relative bar	±1,2%	0.5 to 4.5 V	10 ms	IP65 [1]
E3	0.5 to 5.5 Vdc	-40T135 °C	12.8 relative bar	±1,2%	0.5 to 4.5 V	10 ms	IP65 [1]
SPK*: 4 to 20 mA - male series C							
*1000000	8 to 28 Vdc	-25T80 °C	-0.5 to 7 bar	±1% fs	4 to 20 mA	-	IP67
*240000	8 to 28 Vdc	-25T80 °C	-1 to 24 bar	±1% fs	4 to 20 mA	-	IP67
*2500000	8 to 28 Vdc	-25T80 °C	0 to 25 bar	±1% fs	4 to 20 mA	-	IP67
*3000000	8 to 28 Vdc	-25T80 °C	0 to 30 bar	±1% fs	4 to 20 mA	-	IP67
SPK*C*: 4 to 20 mA - female series C							
*T0021C0	8 to 28 Vdc	-40T135 °C	-0.5 to 7 bar	±1% fs; 0T50 °C	4 to 20 mA	<10 ms	IP65 [1]
*T0011C0	8 to 28 Vdc	-40T135 °C	0 to 10 bar	±1% fs; 0T50 °C	4 to 20 mA	<10 ms	IP65 [1]
*T0031C0	8 to 28 Vdc	-40T135 °C	0 to 30 bar	±1% fs; 0T50 °C	4 to 20 mA	<10 ms	IP65 [1]
*T0041C0	8 to 28 Vdc	-40T135 °C	0 to 18.2 bar	±1% fs; 0T50 °C	4 to 20 mA	<10 ms	IP65 [1]
*T00B1C0	8 to 28 Vdc	-40T135 °C	0 to 44.8 bar	±1% fs; 0T50 °C	4 to 20 mA	<10 ms	IP65 [1]
*T00G1C0	8 to 28 Vdc	-40T135 °C	0 to 60 bar	±1% fs; 0T50 °C	4 to 20 mA	<10 ms	IP65 [1]
*T00D8C0	8 to 28 Vdc	-40T100 °C	0 to 150 bar	±1% fs; 0T50 °C	4 to 20 mA	<10 ms	IP65 [1]
*T00M8C0	8 to 28 Vdc	-40T100 °C	0 to 120 bar	±1% fs; 0T50 °C	4 to 20 mA	<10 ms	IP65 [1]
SPK*: 4 to 20 mA - female series D							
*T0021D0	8 to 28 Vdc	-40T135 °C	-0.5 to 7 bar	±1% fs; 0T40 °C	4 to 20 mA	<10 ms	IP65
*T0011D0	8 to 28 Vdc	-40T135 °C	0 to 10 bar	±1% fs; 0T40 °C	4 to 20 mA	<10 ms	IP65
*T0041D0	8 to 28 Vdc	-40T135 °C	0 to 18.2 bar	±1% fs; 0T40 °C	4 to 20 mA	<10 ms	IP65
*T0031D0	8 to 28 Vdc	-40T135 °C	0 to 30 bar	±1% fs; 0T40 °C	4 to 20 mA	<10 ms	IP65
*T00B1D0	8 to 28 Vdc	-40T135 °C	0 to 44.8 bar	±1% fs; 0T40 °C	4 to 20 mA	<10 ms	IP65
*T00G1D0	8 to 28 Vdc	-40T135 °C	0 to 60 bar	±1% fs; 0T40 °C	4 to 20 mA	<10 ms	IP65
SPK*: 0 to 5 V - female series S							
*T0051S0	0.5 to 4.5 Vdc	-40T125 °C	-1 to 4.2 bar	±1% fs; 0T50 °C	0.5 to 4.5 V	<10 ms	IP67
*T0011S0	0.5 to 4.5 Vdc	-40T125 °C	-1 to 9.3 bar	±1% fs; 0T50 °C	0.5 to 4.5 V	<10 ms	IP67
*T00E1S0	0.5 to 4.5 Vdc	-40T125 °C	-1 to 12.8 bar	±1% fs; 0T50 °C	0.5 to 4.5 V	<10 ms	IP67
*T0041S0	0.5 to 4.5 Vdc	-40T125 °C	0 to 17.3 bar	±1% fs; 0T50 °C	0.5 to 4.5 V	<10 ms	IP67
*T00F1S0	0.5 to 4.5 Vdc	-40T125 °C	0 to 20.7 bar	±1% fs; 0T50 °C	0.5 to 4.5 V	<10 ms	IP67
*T0031S0	0.5 to 4.5 Vdc	-40T125 °C	0 to 34.5 bar	±1% fs; 0T50 °C	0.5 to 4.5 V	<10 ms	IP67
*T00B1S0	0.5 to 4.5 Vdc	-40T125 °C	0 to 45 bar	±1% fs; 0T50 °C	0.5 to 4.5 V	<10 ms	IP67
*T00G1S0	0.5 to 4.5 Vdc	-40T125 °C	0 to 60 bar	±1% fs; 0T50 °C	0.5 to 4.5 V	<10 ms	IP67
*T00L1S0	0.5 to 4.5 Vdc	-40T125 °C	0 to 90 bar	±1% fs; 0T50 °C	0.5 to 4.5 V	<10 ms	IP67
SPK*D0*: 4 to 20 mA - male series D							
*10000D0	8 to 28 Vac	-25T80 °C	-0.5 to 7 bar	±1% fs	4 to 20 mA	-	IP67
*24000D0	8 to 28 Vac	-25T80 °C	-1 to 24 bar	±1% fs	4 to 20 mA	-	IP67
*30000D0	8 to 28 Vac	-25T80 °C	0 to 30 bar	±1% fs	4 to 20 mA	-	IP67

[1] with built-in IP67 connector

Differential air pressure transducers

Models	power supply:	input current	differential pressure range	differential pressure accuracy full scale	output signal	filtered signal	IP
SPKD00C5N0	15 to 30 Vdc	≥20 mA	-50 to 50 Pa -100 to 100 Pa 0 to 50 Pa 0 to 100 Pa	±3%	4 to 20 mA	selectable 1 or 10 s	IP65
SPKTD00U5N0	15 to 30 Vdc	≥20 mA	0 to 1000 Pa 0 to 2000 Pa 0 to 3000 Pa 0 to 5000 Pa	±3%	4 to 20 mA	selectable 1 or 10 s	IP65

Pressure switches and flow switches

Operating conditions	sensor	range	accuracy	maximum current	output signal	contacts	IP
DCPD0*0100: pressure switch for duct							
-25T85 °C max 50 mbar	silicone membrane	0.5 to 5 mbar	0.2 ± 15% mbar	1.5 (A) 25 Vac 0.1 A 24 Vac	NO...NC voltage-free contact	AgCdO contacts watertight switch	IP54
DCPD0*1100: pressure switch for duct							
-20T85 °C max 50 mbar	silicone membrane	0.2 to 2 mbar	0.2 ± 15% mbar	1.5 (A) 25 Vac 0.1 A 24 Vac	NO...NC voltage-free contact	AgCdO contacts watertight switch	IP54
DCFL000100: flow switches							
-40T85 °C	silicone membrane	2.5 to 9.2 m/s (start) 1 to 8 m/s (stop)		15 (8) A 24/250 Vac	NO...NC voltage-free contact	watertight switch	IP65

*: "1" with assembly kit

Wireless devices for monitoring temperature, humidity, light and energy

The CAREL rTM monitoring system, is used to monitor temperature, humidity, light intensity and pulse counters from energy meter modules, in combination with CAREL supervisory systems or programmable controllers with special software.

Composition

- Battery or mains powered sensors for measuring the temperature of cabinets and cold rooms (°C). Available in versions with built-in sensors (BP) and external sensors (EP);
- Battery powered sensors for measuring temperature, humidity, light intensity in rooms, type SA (°C - RH%) or SI (°C - r.H.% - Lux);
- Pulse counter from energy meter modules for monitoring electricity, water and gas consumption, battery powered (CI) or mains powered (RC);
- RA (Router-Actuator) I/O module, to measure the status of the inputs and activate general loads. Can be configured as a thermostat with direct/reverse logic;
- RB (Router-Bridge) to connect instruments locally over Modbus® RS485 that are not accessible to cabled lines.

The devices use a 2.4 GHz wireless connection (16 channels, 2405 to 2480 MHz) with ZigBee communication protocol and MESH networks with up to 7 hops, automatic adaptation of communication between devices, optimising wireless communication routes when the devices are not directly reachable from the Access Point, so as to guarantee continuous communication.
Battery or mains powered sensors.
The battery powered sensors require no electrical connection and typical battery life is 5/8 years; mains powered devices require no routine maintenance.
All wireless sensors send the data measured to the Access Point via radio; this acquires information from the sensors and then forwards it to the CAREL supervisory system or controller, over the Modbus® RTU RS485 serial network.
The system can be easily extended and modified following installation.
Handheld configuration devices are available for simple configuration and installation.

Benefits

Ideal for retrofits on existing systems, being easy to install:

- no electrical connections required;
- flexible layout in the event of structural modifications;
- simple installation and maintenance;
- existing controllers do not need to be replaced, as the system is completely independent and can be integrated into any installation;
- simplifies monitoring of the installation (including over remote connections). In the event of alarms, operating status can be notified via SMS, email, FAX;
- supervisory systems can be used to process and send customised reports and data log files.

BP - temperature sensor

WS01U01M0*

Sensor suitable for installation in refrigeration cabinets. The local button disables the high temperature signal alarm when the cabinet is off or being cleaned.
The sensor is ready to be installed directly inside the cabinet with its own fastening bracket. The rear wall has metal shielding that, combined with thermal insulation inside the shell, offers better heat insulation, eliminating the influence of the surface of the refrigerated cabinet.

Functions implemented

- instant temperature;
- product simulation temperature;
- monitoring of temperature thresholds for high temperature (HACCP) or low temperature alarm signals (to prevent products from freezing);
- disable high temperature alarm from local "Clean" button;
- battery level control in mV and residual charge in mAh;
- wireless signal level control.

Technical specifications

Power supply: 3.6 V lithium battery 2500 mAh, "AA" size
Operating conditions: -40T50 °C 80% r.H. non-condensing
Degree of protection: IP65
Assembly: wall-mounted on bracket
Dimensions: 83.9x71.6x34 mm

EP - temperature sensor

WS01W02M00

The EP sensor (External Probe) is used inside cabinets or cold rooms to monitor temperature in combination with supervisory systems. It transmits temperature data measured by the two NTC probes, and the status of two digital inputs, configurable as "door status" and "defrost status" or for generic use.

Functions implemented

- instant temperature read by the two sensors;
- monitoring of temperature thresholds for high temperature (HACCP) or low temperature alarm signals;
- battery level control in mV;
- wireless signal level control.

Technical specifications

Power supply: 3.6 V lithium battery 2500 mAh, "AA" size
Operating conditions: 0T50°C 80% r.H. non-condensing
Degree of protection: IP55
Assembly: wall-mounted
Number of I/Os:
- **analogue inputs:** 2 NTC 10 K at 25°C
- **digital inputs:** 2 (voltage-free contact)

Dimensions: 94x102x40 mm
Connections: plug-in terminals, wire size 0.5 mm^2

SA - room temperature and humidity sensor

WS01G01M00

The SA wireless room sensor is battery-powered and is installed inside rooms to monitor temperature and humidity.

Functions implemented

- instant temperature;
- instant humidity;
- monitoring of temperature and humidity thresholds;
- battery level control in mV;
- wireless signal level control.

Technical specifications

Power supply: 3.6 V lithium battery 2500 mAh, "AA" size
Operating conditions: -10T60°C 80% r.H. non-condensing
Degree of protection: IP30
Assembly: wall-mounted
Dimensions: 127x80x30 mm

SI - temperature, humidity and light sensor

WS01F01M00

The SI wireless industrial sensor is battery-powered and is installed inside rooms to monitor temperature, humidity and light intensity.

Functions implemented

- instant temperature;
- instant humidity;
- instant light intensity;
- monitoring of temperature, humidity and light intensity thresholds;
- battery level control in mV;
- wireless signal level control.

Technical specifications

Power supply: 3.6 V lithium battery 2500 mAh, "AA" size
Operating conditions: -20T70°C 80% r.H. non-condensing
Degree of protection: IP55 case, IP40 sensor cap
Assembly: wall-mounted
Dimensions: 94x153x40 mm

CI - pulse counter

WS01E02M00

The CI battery-powered wireless pulse counter is a device used together with energy meters to measure electricity, gas, or water consumption, without the need to install electrical cables.
It can manage two energy meters using two digital inputs, and is ready for connection of two external NTC temperature probes. Closing of the contacts on the digital inputs activates two separate pulse counters.
The number of pulses is converted to an energy value (KW, m^3) by the CAREL supervisor or controller with special software, so as to total and monitor energy utility consumption. It can manage up to two energy meters configured to send pulse signals.

Functions implemented

- two separate pulse counters;
- battery level control in mV;
- wireless signal level control;
- instant temperature read by two NTC probes;
- temperature difference between NTC probes.

Technical specifications

Power supply: 3.6 V lithium battery 2500 mAh, "AA" size
Operating conditions: 0T50°C 80% r.H. non-condensing
Degree of protection: IP55
Assembly: wall-mounted
Number of I/Os:
- **analogue inputs:** 2 NTC 10 K at 25°C;
- **digital inputs:** 2 (voltage-free contact)

Dimensions: 94x108x40 mm
Connections: plug-in terminals, wire size 0.5 mm^2

Access Point

WS01AB2M20

This device acquires data via the wireless signals sent by the sensors or Routers over the ZigBee™ network, and then forwards these over a Modbus® RTU RS485 serial line. A CAREL supervisor (PlantVisorPRO or PlantWatchPRO) or controller can be used to manage the rTM system variables. Up to 30 sensors can be bound to each Access Point, and a maximum of 60 when adding one or more Routers. Up to 7 Access Points can be connected to the same Modbus RS485 serial network, for a total of 111 sensors on each serial line.

Technical specifications

Power supply: 12/24 Vac/Vdc ±10%;
Operating conditions: 0T50°C 80% r.H. non-condensing
Degree of protection: IP55
Assembly: wall-mounted
Serial ports: RS485 Modbus®
Dimensions: 94x300x40 mm
Connections: plug-in terminals, wire size 0.5 mm^2

RO - router

WS01RC1M20

This device is used when the distance between sensor and Access Point exceeds 30 m, or alternatively the number of network nodes (sensors) exceeds a total of 30. A maximum of 60 Routers can be installed in the wireless network, 48 of which can be accessed by the supervisor. The Access Point automatically assigns the serial address in the order in which these are "bound" (from 200 to 247).

Technical specifications

Power supply: 230 Vac -20/+10 %;
Operating conditions: 0T50 °C 80% r.H. non-condensing
Degree of protection: IP55
Assembly: wall-mounted
Dimensions: 98x300x44 mm
Connections: plug-in terminals, wire size 0.5 mm^2

RB - router bridge

WS01RB2M20

This device is used to connect Modbus® RS485 instruments via radio when these are not accessible using cabled lines, using a wireless connection to send data from the instruments to the supervisor. The instruments are connected locally on the serial line, which acquires data and forwards them to the Access Point. The Access Point is physically connected to the supervisor, and the instruments connected locally to the Router-Bridge devices are logically assigned to the main network (where the Access Point is physically connected).
This is an excellent solution for all refrigeration and air-conditioning applications and others with similar needs.
The device is a solution for binding all wired devices that require wireless communicate.
It also includes the Router function.

Technical specifications

Power supply: 12/24 Vac/Vdc ±10%;
Operating conditions: 0T50 °C 80% r.H. non-condensing
Degree of protection: IP55
Assembly: wall-mounted
Serial ports: RS485 Modbus®
Dimensions: 94x300x40 mm
Connections: plug-in terminals, wire size 0.5 mm^2

EP1 - router sensor

WS01VB2M10

This integrates the same functions as the EP battery-powered sensor and the RO Router, and features two network addresses (one for the sensor and one for the router).

Functions implemented

- instant temperature read by the two sensors;
- monitoring of temperature thresholds for high temperature (HACCP) or low temperature alarm signals;
- wireless signal level control;

Technical specifications

Power supply: 12/24 Vac/Vdc ±10%;;
Operating conditions: 0T50 °C 80% r.H. non-condensing
Degree of protection: IP55
Assembly: wall-mounted
Number of I/Os:
- **analogue inputs:** 2 NTC 10 K at 25°C;
- **digital inputs:** 2 (voltage-free contact)

Dimensions: 94x300x40 mm
Connections: plug-in terminals, wire size 0.5 mm^2

RC - router/pulse counter

WS01N02M20

This integrates the same functions as the CI pulse counter and the RO Router, and features two network addresses (one for the pulse counter and one for the router).

Functions implemented

- management of two separate pulse counters;
- wireless signal level control;
- instant temperature measurement by two NTC probes;
- temperature difference between NTC probes.

Technical specifications

Power supply: 12/24 Vac/Vdc ±10%;
Operating conditions: 0T50 °C 80% r.H. non-condensing
Degree of protection: IP55
Assembly: wall-mounted
Number of I/Os:
- **analogue inputs:** 2 NTC 10 K at 25°C;
- **digital inputs:** 2 (voltage-free contact)

Dimensions: 94x300x40 mm
Connections: plug-in terminals, wire size 0.5 mm^2

RA - router actuator

WS01H02M20

This module can be configured as a wireless I/O actuator for managing loads and reading generic inputs. It can be configured as a thermostat with heat-cool operating logic. When used as an I/O module, the outputs are managed directly by Modbus variables (via CAREL supervisor or controller with special software). When used as a thermostat, it sends the I/O status to the supervisor for monitoring. It also integrates the Router function and features two network addresses (one for the I/O module - thermostat and one for the router).

Configured as an I/O module it manages:

- 2 digital inputs;
- 2 digital outputs, 1 A/24 Vac;
- 1 analogue inputs (NTC 10 K at 25°C)

Functions implemented

- management of remote loads, reading analogue and digital inputs;
- activation of digital outputs from digital input;
- thermostat management (heat – cool);
- wireless signal level control;

Technical specifications

Power supply: 12/24 Vac/Vdc ±10%;
Operating conditions: 0T50 °C 80% r.H. non-condensing
Degree of protection: IP55
Assembly: wall-mounted
Number of I/Os:
- **analogue inputs:** 1 NTC 10 K at 25°C
- **digital inputs:** 2 (voltage-free contact)
- **digital outputs:** 2 (1 A, 24 Vac)

Dimensions: 118x300x40 mm
Connections: plug-in terminals, wire size 0.5 mm^2

Handheld configuration device

WS01L01M00

The rTM handheld is a useful device for installation, commissioning and service of CAREL ZigBee™ wireless networks for the rTM system.

Functions implemented

- reading of wireless channels occupied, performed before wireless system installation (in the fiel);
- measurement of wireless signal intensity from Access Point or Router;
- simplified opening and closing of the wireless network during commissioning;
- reset default parameters on Access Point and Router;
- assign serial address (ID) to the BP Sensor.

Technical specifications

Power supply: 1.5V "AAA" size batteries
Operating conditions: 0T50 °C 80% r.H. non-condensing
Degree of protection: IP40
Dimensions: 72,5x167,5x28 mm

Remote management and communication solutions

+800F03001 - REV 03

System monitoring and supervision solutions

The use of a global monitoring and supervision system is always more essential, due to the necessity to manage alarms quicker and more efficiently and to optimise the routine and special maintenance of systems. In addition, standards in force and the trend towards energy saving make these systems a key to success and differentiation.

CAREL fulfils these needs by offering field devices fitted with RS485 and/or Ethernet interface for connection to local and centralised supervisor systems.

Depending on the various types of system and requirements, CAREL offers:

- PlantWatchPRO: compact embedded solution for small refrigeration and air conditioning systems up to a maximum of 50 devices.;
- boss: embedded solution for medium and large systems up to a maximum of 300 devices;
- RemotePRO: software solution for centralised server in order to manage the system installed quicker and in an optimised manner.

Certification

EN12830

boss and PlantWatchPRO are compliant, as required by EC regulation 37/2005 of 12 January 2005, with standard EN 12380 on temperature recorders for the transport, storage and distribution of refrigerated, frozen and deep-frozen food and ice cream.

Underwriters Laboratories®

oss and PlantWatchPRO are compliant with UL standards for product certification on the North American market.

Benefits

The CAREL supervision systems use modern WEB technology, making remote access always much quicker and more secure at the same time. The data is memorised inside a database, thus guaranteeing integrity and reliability of the information.

The embedded plug&play solution and the software made to measure for the user, greatly reduce installation and configuration times in the system.

The user-friendliness, the complete control of the systems, the sophisticated configuration for the notification of alarms and the tools for analysis are all features that make CAREL supervision a winning solution.

boss

BMHST*

boss is the new CAREL local supervisor for medium-sized / large systems.

The extensive configurability, the possibility to customise maps, the introduction of new protocols, in particular BACnet™, and the possibility of communicating with devices via Ethernet mean boss is also suitable for HVAC applications.

boss can also be used together with other BMS systems in large buildings that manage functions that are not the main features of boss (alarm management, fire safety,…); in these cases, boss can be used specifically for the HVAC part, providing specific data that creates added value for the end customer, and then sharing with the main BMS only the information needed to understand system status.

For the first time ever on a CAREL supervisor, boss introduces the BACnet™ protocol, the leading protocol in HVAC supervision applications. This new feature significantly increases the possibility to integrate third party devices. The BACnet™ Master protocol is available in both MS/TP (RS485) and TCP/IP modes, and together with the Modbus® RS485 and Modbus® TCP/IP protocols, these too available on boss, offers the possibility to interact with the widest range of devices in the HVAC/R sector.

The built-in Wi-Fi is used to create a private network and allow the supervisor to be accessed from the user's mobile device, without requiring other network infrastructure.

boss mini

BMHST*

boss mini is the new CAREL local supervisor for small and medium-sized sites. boss is still the best choice for larger sites.
The remarkable configurability, the possibility to customise the maps and the introduction of the new protocols, in particular BACnet™, and the possibility to communicate with the devices via Ethernet, make boss ideal for HVAC applications.

Usage Balancer plug-in

Supplied free-of-charge when purchasing bossmini, developed specifically for humidification applications. Its various features include the possibility to group several temperature probes and calculate the average, using this value to control the humidifiers. The groups can be created without distinctions in terms of technology and maximum capacity. Two main types of control are available:

- Balanced: the humidifiers in the group operate at the same percentage of capacity, set by bossmini according to the set point and relative humidity measured;
- Grouped: the humidifiers in the group are activated in order, according to the number of operating hours.

Specific variables can be logged and plotted on graphs. Alarm management and display, together with the psychrometric chart showing the ambient humidity conditions, complete the main features of the plug-in.

DIGITALHUM

DIGITALHUM is CAREL's new cloud-based platform for centralised site monitoring and management.
Connectivity to the system is simple and immediate, using the "Cloudgate" gateway connection available in the Ethernet and 4G versions. The system can thus collect all the data from the site using a channel that is independent of the site's infrastructure. The new DigitalHUM cloud portal is a plug&play solution for the remote management of humidifiers.
The humidifier operating data are available at all times on the cloud, as support for maintenance and to manage and reduce operating costs.

Reports, graphs and alarms provide a rapid overview of unit status, allowing users to make the necessary changes to improve operation, either over the same remote connection, or planning specific service on site.

Terminals

PGDT*, PGD1*, AT*

CAREL offers a vast range of terminals that respond precisely to customer needs:

- pGD Touch is the new range of touchscreen displays that make navigating the screens simple and intuitive for the user;
- pGD1, the basic model in the pCO sistema family of "terminals", designed with a graphic LCD to offer versatility and customisation, while ensuring a high aesthetic standard;
- th-Tune, the room terminal that allows users to control room temperature and humidity in residential or light commercial environments.

Energy meters

MT*

These are instruments used to measure the main electrical parameters and consumption of connected loads.
They record consumption data and allow complete and detailed analysis, meaning the operator can:

- identify when and where consumption takes place;
- identify incorrect behaviour and use;
- diagnose faults and abnormal consumption;
- assess the effects of energy saving actions to be adopted.

Record the main values:

- active power;
- reactive power;
- current measurement;
- phase sequence;
- cos φ;
- frequency.

Closed and openable current transformers are available for the three-phase version.
The openable version offers the advantage of allowing installation without needing to disconnect the power supply, avoiding system shutdown.

Headquarters

CAREL INDUSTRIES HQs
Via dell'Industria, 11 - 35020 Brugine - Padova (Italy)
Tel. (+39) 0499 716611 - Fax (+39) 0499 716600
carel@carel.com

HygroMatik GmbH
Lise-Meitner-Straße 3
24558 Henstedt-Ulzburg - Germany
hy@hygromatik.de

RECUPERATOR
Via Valfurva 13
20027 Rescaldina (MI), Italy
customercare@recuperator.eu

ENGINIA S.r.l.
Viale Lombardia, 78
20056 Trezzo Sull'Adda (MI), Italy
commerciale@enginiasrl.com

For more information

CAREL Asia
www.carel.hk

CAREL Australia
www.carel.com.au

CAREL Central & Southern Europe
www.carel.com

CAREL Czech & Slovakia
CAREL spol. s.r.o.
www.carel.cz

CAREL Deutschland
www.carel.de

CAREL China
www.carel-china.com

CAREL France
www.carelfrance.fr

CAREL Korea
www.carel.kr

CAREL Ibérica
www.carel.es

CAREL Ireland
FarrahVale Controls & Electronics Ltd.
www.carel.ie

CAREL Italy
www.carel.it

CAREL India
www.carel.in

CAREL Japan
www.carel-japan.com

CAREL Mexicana
www.carel.mx

CAREL Middle East
www.carel.ae

CAREL Nordic
www.carelnordic.se

CAREL Poland
Alfaco Polska Sp z o.o.
www.carel.pl

CAREL Russia
www.carelrussia.com

CAREL South Africa
www.carel.com

CAREL Sud America
www.carel.com.br

CAREL Thailand
www.carel.co.th

CAREL Turkey
CFM Sogutma ve Otomasyon San. Tic. Ltd.
www.carel.com.tr

CAREL U.K.
www.careluk.com

CAREL U.S.A.
www.carelusa.com

CAREL Ukraina
www.carel.ua

CAREL Canada
Enersol Inc.
www.enersol.ca

CAREL

+800003001 - 5.3 - 27.02.2023